NOT MEASUREMENT SENSITIVE

MIL-HDBK-217F

2 DECEMBER 1991

SUPERSEDING

MIL-HDBK-217E, Notice 1

2 January 1990

MILITARY HANDBOOK

RELIABILITY PREDICTION OF ELECTRONIC EQUIPMENT

AMSC N/A

FSC-RELI

DISTRIBUTION STATEMENT A: Approved for public release; distribution unlimited.

Wringing grems W1 = weight of specimen after

DEPARTMENT OF DEFENSE
WASHINGTON DC 20301

RELIABILITY PREDICTION OF ELECTRONIC EQUIPMENT

1. This standardization handbook was developed by the Department of Defense with the assistance of the military departments, federal agencies, and industry.

2. Every effort has been made to reflect the latest information on reliability prediction procedures. It is the intent to review this handbook periodically to ensure its completeness and currency.

3. Beneficial comments (recommendations, additions, deletions) and any pertinent data which may be of use in improving this document should be addressed to: Commander, Rome Laboratory, AFSC, ATTN: ERSS, Griffiss Air Force Base, New York 13441-5700, by using the self-addressed Standardization Document Improvement Proposal (DD Form 1426) appearing at the end of this document or by letter.

CONTENTS

SECTION 1: SCOPE

1.1 Purpose 1-1
1.2 Application 1-1
1.3 Computerized Reliability Prediction 1-1

SECTION 2: REFERENCE DOCUMENTS 2-1

SECTION 3: INTRODUCTION

3.1 Reliability Engineering 3-1
3.2 The Role of Reliability Prediction 3-1
3.3 Limitations of Reliability Predictions 3-2
3.4 Part Stress Analysis Prediction 3-2

SECTION 4: RELIABILITY ANALYSIS EVALUATION 4-1

SECTION 5: MICROCIRCUITS, INTRODUCTION 5-1

5.1 Gate/Logic Arrays and Microprocessors 5-3
5.2 Memories 5-4
5.3 VHSIC/VHSIC Like 5-7
5.4 GaAs MMIC and Digital Devices 5-8
5.5 Hybrids 5-9
5.6 SAW Devices 5-10
5.7 Magnetic Bubble Memories 5-11
5.8 π_T Table for All 5-13
5.9 C_2 Table for All 5-14
5.10 π_E, π_L and π_Q Tables for All 5-15
5.11 T_J Determination, (All Except Hybrids) 5-17
5.12 T_J Determination, (For Hybrids) 5-18
5.13 Examples 5-20

SECTION 6: DISCRETE SEMICONDUCTORS

6.0 Discrete Semiconductors, Introduction 6-1
6.1 Diodes, Low Frequency 6-2
6.2 Diodes, High Frequency (Microwave, RF) 6-4
6.3 Transistors, Low Frequency, Bipolar 6-6
6.4 Transistors, Low Frequency, Si FET 6-8
6.5 Transistors, Unijunction 6-9
6.6 Transistors, Low Noise, High Frequency, Bipolar 6-10
6.7 Transistors, High Power, High Frequency, Bipolar 6-12
6.8 Transistors, High Frequency, GaAs FET 6-14
6.9 Transistors, High Frequency, Si FET 6-16
6.10 Thyristors and SCRs 6-17
6.11 Optoelectronics, Detectors, Isolators, Emitters 6-19
6.12 Optoelectronics, Alphanumeric Displays 6-20
6.13 Optoelectronics, Laser Diode 6-21
6.14 T_J Determination 6-23
6.15 Example 6-25

CONTENTS

SECTION 7: TUBES

7.1 All Types Except TWT and Magnetron 7-1
7.2 Traveling Wave 7-3
7.3 Magnetron 7-4

SECTION 8: LASERS

8.0 Introduction 8-1
8.1 Helium and Argon 8-2
8.2 Carbon Dioxide, Sealed 8-3
8.3 Carbon Dioxide, Flowing 8-4
8.4 Solid State, ND:YAG and Ruby Rod 8-5

SECTION 9: RESISTORS

9.0 Introduction 9-1
9.1 Fixed, Composition (RCR, RC) 9-2
9.2 Fixed, Film (RLR, RL, RN (R,C, or N), RN) 9-3
9.3 Fixed, Film, Power (RD) 9-5
9.4 Network, Fixed, Film (RZ) 9-6
9.5 Fixed, Wirewound (RBR, RB) 9-7
9.6 Fixed, Wirewound, Power (RWR, RW) 9-8
9.7 Fixed, Wirewound, Power, Chassis Mounted (RER, RE) 9-10
9.8 Thermistor (RTH) 9-12
9.9 Variable, Wirewound (RTR, RT) 9-13
9.10 Variable, Wirewound, Precision (RR) 9-15
9.11 Variable, Wirewound, Semiprecision (RA, RK) 9-17
9.12 Variable, Wirewound, Power (RP) 9-19
9.13 Variable, Nonwirewound (RJ, RJR) 9-21
9.14 Variable, Composition (RV) 9-23
9.15 Variable, Nonwirewound, Film and Precision (RQ, RVC) 9-25
9.16 Calculation of Stress Ratio for Potentiometers 9-27
9.17 Example 9-29

SECTION 10: CAPACITORS

10.1 Fixed, Paper, By-Pass (CP, CA) 10-1
10.2 Fixed, Feed-Through (CZR, CZ) 10-3
10.3 Fixed, Paper and Plastic Film (CPV, CQR and CQ) 10-5
10.4 Fixed, Metallized Paper, Paper-Plastic and Plastic (CH, CHR) 10-7
10.5 Fixed, Plastic and Metallized Plastic 10-9
10.6 Fixed, Super-Metallized Plastic (CRH) 10-11
10.7 Fixed, MICA (CM, CMR) 10-12
10.8 Fixed, MICA, Button (CB) 10-14
10.9 Fixed, Glass (CY, CYR) 10-16
10.10 Fixed, Ceramic, General Purpose (CK, CKR) 10-18
10.11 Fixed, Ceramic, Temperature Compensating and Chip (CCR and CC, CDR) 10-20
10.12 Fixed, Electrolytic, Tantalum, Solid (CSR) 10-21
10.13 Fixed, Electrolytic, Tantalum, Non-Solid (CL, CLR) 10-22
10.14 Fixed, Electrolytic, Aluminum (CUR and CU) 10-24
10.15 Fixed, Electrolytic (Dry), Aluminum (CE) 10-26
10.16 Variable, Ceramic (CV) 10-27
10.17 Variable, Piston Type (PC) 10-28
10.18 Variable, Air Trimmer (CT) 10-29
10.19 Variable and Fixed, Gas or Vacuum (CG) 10-30
10.20 Example 10-32

CONTENTS

SECTION 11: INDUCTIVE DEVICES
11.1 Transformers 11-1
11.2 Coils 11-3
11.3 Determination of Hot Spot Temperature 11-5

SECTION 12: ROTATING DEVICES
12.1 Motors 12-1
12.2 Synchros and Resolvers 12-3
12.3 Elapsed Time Meters 12-4
12.4 Example 12-5

SECTION 13: RELAYS
13.1 Mechanical 13-1
13.2 Solid State and Time Delay 13-3

SECTION 14: SWITCHES
14.1 Toggle or Pushbutton 14-1
14.2 Basic Sensitive 14-2
14.3 Rotary 14-3
14.4 Thumbwheel 14-4
14.5 Circuit Breakers 14-5

SECTION 15: CONNECTORS
15.1 General (Except Printed Circuit Board) 15-1
15.2 Printed Circuit Board 15-4
15.3 Integrated Circuit Sockets 15-6

SECTION 16: INTERCONNECTION ASSEMBLIES
16.1 Interconnection Assemblies with Plated Through Holes 16-1

SECTION 17: CONNECTIONS
17.1 Connections 17-1

SECTION 18: METERS
18.1 Meters, Panel 18-1

SECTION 19: QUARTZ CRYSTALS
19.1 Quartz Crystals 19-1

SECTION 20: LAMPS
20.1 Lamps 20-1

SECTION 21: ELECTRONIC FILTERS
21.1 Electronic Filters, Non-Tunable 21-1

SECTION 22: FUSES
22.1 Fuses 22-1

SECTION 23: MISCELLANEOUS PARTS
23.1 Miscellaneous Parts 23-1

APPENDIX A: PARTS COUNT RELIABILITY PREDICTION A-1

APPENDIX B: VHSIC/VHSIC-LIKE AND VLSI CMOS (DETAILED MODEL) B-1

APPENDIX C: BIBLIOGRAPHY C-1

CONTENTS

LIST OF TABLES

Table 3-1: Parts with Multi-Level Quality Specifications 3-3
Table 3-2: Environmental Symbol and Description 3-4
Table 4-1: Reliability Analysis Checklist 4-1
Table 6-1: Default Case Temperatures for All Environments (°C) 6-23
Table 6-2: Approximate Thermal Resistance for Semiconductor Devices in Various Package Sizes 6-24

LIST OF FIGURES

Figure 5-1: Cross Sectional View of a Hybrid with a Single Multi-Layered Substrate 5-18
Figure 8-1: Examples of Active Optical Surfaces 8-1
Figure 9-1: MIL-R-39008 Derating Curve 9-1

FOREWORD

This revision to MIL-HDBK-217 provides the following changes based upon recently completed studies (see Ref. 30 and 32 listed in Appendix C):

1. New failure rate prediction models are provided for the following nine major classes of microcircuits:

   - Monolithic Bipolar Digital and Linear Gate/Logic Array Devices
   - Monolithic MOS Digital and Linear Gate/Logic Array Devices
   - Monolithic Bipolar and MOS Digital Microprocessor Devices (Including Controllers)
   - Monolithic Bipolar and MOS Memory Devices
   - Monolithic GaAs Digital Devices
   - Monolithic GaAs MMIC Devices
   - Hybrid Microcircuits
   - Magnetic Bubble Memories
   - Surface Acoustic Wave Devices

This revision provides new prediction models for bipolar and MOS microcircuits with gate counts up to 60,000, linear microcircuits with up to 3000 transistors, bipolar and MOS digital microprocessor and co-processors up to 32 bits, memory devices with up to 1 million bits, GaAs monolithic microwave integrated circuits (MMICs) with up to 1,000 active elements, and GaAs digital ICs with up to 10,000 transistors. The C_1 factors have been extensively revised to reflect new technology devices with improved reliability, and the activation energies representing the temperature sensitivity of the dice (π_T) have been changed for MOS devices and for memories. The C_2 factor remains unchanged from the previous Handbook version, but includes pin grid arrays and surface mount packages using the same model as hermetic, solder-sealed dual in-line packages. New values have been included for the quality factor (π_Q), the learning factor (π_L), and the environmental factor (π_E). The model for hybrid microcircuits has been revised to be simpler to use, to delete the temperature dependence of the seal and interconnect failure rate contributions, and to provide a method of calculating chip junction temperatures.

2. A new model for Very High Speed Integrated Circuits (VHSIC/VHSIC Like) and Very Large Scale Integration (VLSI) devices (gate counts above 60,000).

3. The reformatting of the entire handbook to make it easier to use.

4. A reduction in the number of environmental factors (π_E) from 27 to 14.

5. A revised failure rate model for Network Resistors.

6. Revised models for TWTs and Klystrons based on data supplied by the Electronic Industries Association Microwave Tube Division.

1.0 SCOPE

1.1 Purpose - The purpose of this handbook is to establish and maintain consistent and uniform methods for estimating the inherent reliability (i.e., the reliability of a mature design) of military electronic equipment and systems. It provides a common basis for reliability predictions during acquisition programs for military electronic systems and equipment. It also establishes a common basis for comparing and evaluating reliability predictions of related or competitive designs. The handbook is intended to be used as a tool to increase the reliability of the equipment being designed.

1.2 Application - This handbook contains two methods of reliability prediction - "Part Stress Analysis" in Sections 5 through 23 and "Parts Count" in Appendix A. These methods vary in degree of information needed to apply them. The Part Stress Analysis Method requires a greater amount of detailed information and is applicable during the later design phase when actual hardware and circuits are being designed. The Parts Count Method requires less information, generally part quantities, quality level, and the application environment. This method is applicable during the early design phase and during proposal formulation. In general, the Parts Count Method will usually result in a more conservative estimate (i.e., higher failure rate) of system reliability than the Parts Stress Method.

1.3 Computerized Reliability Prediction - Rome Laboratory - ORACLE is a computer program developed to aid in applying the part stress analysis procedure of MIL-HDBK-217. Based on environmental use characteristics, piece part count, thermal and electrical stresses, subsystem repair rates and system configuration, the program calculates piece part, assembly and subassembly failure rates. It also flags overstressed parts, allows the user to perform tradeoff analyses and provides system mean-time-to-failure and availability. The ORACLE computer program software (available in both VAX and IBM compatible PC versions) is available at replacement tape/disc cost to all DoD organizations, and to contractors for application on specific DoD contracts as government furnished property (GFP). A statement of terms and conditions may be obtained upon written request to: Rome Laboratory/ERSR, Griffiss AFB, NY 13441-5700.

2.0 REFERENCE DOCUMENTS

This handbook cites some specifications which have been cancelled or which describe devices that are not to be used for new design. This information is necessary because some of these devices are used in so-called "off-the-shelf" equipment which the Department of Defense purchases. The documents cited in this section are for guidance and information.

SPECIFICATION	SECTION #	TITLE
MIL-C-5	10.7	Capacitors, Fixed, Mica-Dielectric, General Specification for
MIL-R-11	9.1	Resistor, Fixed, Composition (Insulated) General Specification for
MIL-R-19	9.11	Resistor, Variable, Wirewound (Low Operating Temperature) General Specification for
MIL-C-20	10.11	Capacitor, Fixed, Ceramic Dielectric (Temperature Compensating) Established and Nonestablished Reliability, General Specification for
MIL-R-22	9.12	Resistor, Wirewound, Power Type, General Specification for
MIL-C-25	10.1	Capacitor, Fixed, Paper-Dielectric, Direct Current (Hermetically Sealed in Metal Cases), General Specification for
MIL-R-26	9.6	Resistor, Fixed, Wirewound (Power Type), General Specification for
MIL-T-27	11.1	Transformer and Inductor (Audio, Power, High Power, High Power Pulse), General Specification for
MIL-C-62	10.15	Capacitor, Fixed Electrolytic (DC, Aluminum, Dry Electrolyte, Polarized), General Specification for
MIL-C-81	10.16	Capacitor, Variable, Ceramic Dielectric (Trimmer), General Specification for
MIL-C-92	10.18	Capacitor, Variable, Air Dielectric (Trimmer), General Specification for
MIL-R-93	9.5	Resistor, Fixed, Wirewound (Accurate), General Specification for
MIL-R-94	9.14	Resistor, Variable, Composition, General Specification for
MIL-V-95	23.1	Vibrator, Interrupter and Self-Rectifying, General Specification for
W-L-111	20.1	Lamp, Incandescent Miniature, Tungsten Filament
W-C-375	14.5	Circuit Breaker, Molded Case, Branch Circuit and Service
W-F-1726	22.1	Fuse, Cartridge, Class H (This covers renewable and nonrenewable)
W-F-1814	22.1	Fuse, Cartridge, High Interrupting Capacity
MIL-C-3098	19.1	Crystal Unit, Quartz, General Specification for
MIL-C-3607	15.1	Connector, Coaxial, Radio Frequency, Series Pulse, General Specifications for
MIL-C-3643	15.1	Connector, Coaxial, Radio Frequency, Series NH, Associated Fittings, General Specification for
MIL-C-3650	15.1	Connector, Coaxial, Radio Frequency, Series LC

2.0 REFERENCE DOCUMENTS

SPECIFICATION	SECTION #	TITLE
MIL-C-3655	15.1	Connector, Plug and Receptacle, Electrical (Coaxial Series Twin) and Associated Fittings, General Specification for
MIL-C-3767	15.1	Connector, Plug and Receptacle (Power, Bladed Type) General Specification for
MIL-S-3786	14.3	Switch, Rotary (Circuit Selector, Low-Current (Capacity)), General Specification for
MIL-C-3950	14.1	Switch, Toggle, Environmentally Sealed, General Specification for
MIL-C-3965	10.13	Capacitor, Fixed, Electrolytic (Nonsolid Electrolyte), Tantalum, General Specification for
MIL-C-5015	15.1	Connector, Electrical, Circular Threaded, AN Type, General Specification for
MIL-F-5372	22.1	Fuse, Current Limiter Type, Aircraft
MIL-R-5757	13.1	Relay, Electrical (For Electronic and Communication Type Equipment), General Specification for
MIL-R-6106	13.1	Relay, Electromagnetic (Including Established Reliability (ER) Types), General Specification for
MIL-L-6363	20.1	Lamp, Incandescent, Aviation Service, General Requirement for
MIL-S-8805	14.1, 14.2	Switches and Switch Assemblies, Sensitive and Push, (Snap Action) General Specification for
MIL-S-8834	14.1	Switches, Toggle, Positive Break, General Specification for
MIL-M-10304	18.1	Meter, Electrical Indicating, Panel Type, Ruggedized, General Specification for
MIL-R-10509	9.2	Resistor, Fixed Film (High Stability), General Specification for
MIL-C-10950	10.8	Capacitor, Fixed, Mica Dielectric, Button Style, General Specification for
MIL-C-11015	10.10	Capacitor, Fixed, Ceramic Dielectric (General Purpose), General Specification for
MIL-C-11272	10.9	Capacitor, Fixed, Glass Dielectric, General Specification for
MIL-C-11693	10.2	Capacitor, Feed Through, Radio Interference Reduction AC and DC, (Hermetically Sealed in Metal Cases) Established and Nonestablished Reliability, General Specification for
MIL-R-11804	9.3	Resistor, Fixed, Film (Power Type), General Specification for
MIL-C-12889	10.1	Capacitor, By-Pass, Radio - Interference Reduction, Paper Dielectric, AC and DC, (Hermetically Sealed in Metallic Cases), General Specification for
MIL-R-12934	9.10	Resistor, Variable, Wirewound, Precision, General Specification for

SPECIFICATION	SECTION #	TITLE
MIL-C-14157	10.3	Capacitor, Fixed, Paper (Paper Plastic) or Plastic Dielectric, Direct Current (Hermetically Sealed in Metal Cases) Established Reliability, General Specification for
MIL-C-14409	10.17	Capacitor, Variable (Piston Type, Tubular Trimmer), General Specification for
MIL-F-15160	22.1	Fuse, Instrument, Power and Telephone
MIL-C-15305	11.2	Coil, Fixed and Variable, Radio Frequency, General Specification for
MIL-F-15733	21.1	Filter, Radio Interference, General Specification for
MIL-C-18312	10.4	Capacitor, Fixed, Metallized (Paper, Paper Plastic or Plastic Film) Dielectric, Direct Current (Hermetically Sealed in Metal Cases), General Specification for
MIL-F-18327	21.1	Filter, High Pass, Low Pass, Band Pass, Band Suppression and Dual Functioning, General Specification for
MIL-R-18546	9.7	Resistor, Fixed, Wirewound (Power Type, Chassis Mounted), General Specification for
MIL-S-19500	6.0	Semiconductor Device, General Specification for
MIL-R-19523	13.1	Relay, Control, Naval Shipboard
MIL-R-19648	13.1	Relay, Time, Delay, Thermal, General Specification for
MIL-C-19978	10.3	Capacitor, Fixed Plastic (or Paper-Plastic) Dielectric (Hermetically Sealed in Metal, Ceramic or Glass Cases), Established and Nonestablished Reliability, General Specification for
MIL-T-21038	11.1	Transformer, Pulse, Low Power, General Specification for
MIL-C-21097	15.2	Connector, Electrical, Printed Wiring Board, General Purpose, General Specification for
MIL-R-22097	9.13	Resistor, Variable, Nonwirewound (Adjustment Types), General Specification for
MIL-R-22684	9.2	Resistor, Fixed, Film, Insulated, General Specification for
MIL-S-22710	14.4	Switch, Rotary (Printed Circuit), (Thumbwheel, In-line and Pushbutton), General Specification for
MIL-S-22885	14.1	Switches, Pushbutton, Illuminated, General Specification for
MIL-C-22992	15.1	Connector, Cylindrical, Heavy Duty, General Specification for
MIL-C-23183	10.19	Capacitor, Fixed or Variable, Vacuum Dielectric, General Specification for
MIL-C-23269	10.9	Capacitor, Fixed, Glass Dielectric, Established Reliability, General Specification for
MIL-R-23285	9.15	Resistor, Variable, Nonwirewound, General Specification for

2.0 REFERENCE DOCUMENTS

SPECIFICATION	SECTION #	TITLE
MIL-F-23419	22.1	Fuse, Instrument Type, General Specification for
MIL-T-23648	9.8	Thermistor, (Thermally Sensitive Resistor), Insulated, General Specification for
MIL-C-24308	15.1	Connector, Electric, Rectangular, Miniature Polarized Shell, Rack and Panel, General Specification for
MIL-C-25516	15.1	Connector, Electrical, Miniature, Coaxial, Environment Resistant Type, General Specification for
MIL-C-26482	15.1	Connector, Electrical (Circular, Miniature, Quick Disconnect, Environment Resisting) Receptacles and Plugs, General Specification for
MIL-R-27208	9.9	Resistor, Variable, Wirewound, (Lead Screw Activated) General Specification for
MIL-C-28748	15.1	Connector, Electrical, Rectangular, Rack and Panel, Solder Type and Crimp Type Contacts, General Specification for
MIL-R-28750	13.2	Relay, Solid State, General Specification for
MIL-C-28804	15.1	Connector, Electric Rectangular, High Density, Polarized Central Jackscrew, General Specification for, Inactive for New Designs
MIL-C-28840	15.1	Connector, Electrical, Circular Threaded, High Density, High Shock Shipboard, Class D, General Specification for
MIL-M-38510	5.0	Microcircuits, General Specification for
MIL-H-38534	5.0	Hybrid Microcircuits, General Specification for
MIL-I-38535	5.0	Integrated Circuits (Microcircuits) Manufacturing, General Specification for
MIL-C-38999	15.1	Connector, Electrical, Circular, Miniature, High Density, Quick Disconnect, (Bayonet, Threaded, and Breech Coupling) Environment Resistant, Removable Crimp and Hermetic Solder Contacts, General Specification for
MIL-C-39001	10.7	Capacitor, Fixed, Mica Dielectric, Established Reliability, General Specification for
MIL-R-39002	9.11	Resistor, Variable, Wirewound, Semi-Precision, General Specification for
MIL-C-39003	10.12	Capacitor, Fixed, Electrolytic, (Solid Electrolyte), Tantalum, Established Reliability, General Specification for
MIL-R-39005	9.5	Resistor, Fixed, Wirewound, (Accurate) Established Reliability, General Specification for
MIL-C-39006	10.13	Capacitor, Fixed, Electrolytic (Nonsolid Electrolyte) Tantalum Established Reliability, General Specification for
MIL-R-39007	9.6	Resistor, Fixed, Wirewound (Power Type) Established Reliability, General Specification for

SPECIFICATION	SECTION #	TITLE
MIL-R-39008	9.1	Resistor, Fixed, Composition, (Insulated) Established Reliability, General Specification for
MIL-R-39009	9.7	Resistor, Fixed, Wirewound (Power Type, Chassis Mounted) Established Reliability, General Specification for
MIL-C-39010	11.2	Coil, Fixed, Radio Frequency, Molded, Established Reliability, General Specification for
MIL-C-39012	15.1	Connector, Coaxial, Radio Frequency, General Specification for
MIL-C-39014	10.10	Capacitor, Fixed, Ceramic Dielectric (General Purpose) Established Reliability, General Specification for
MIL-C-39015	9.9	Resistor, Variable, Wirewound (Lead Screw Actuated) Established Reliability, General Specification for
MIL-R-39016	13.1	Relay, Electromagnetic, Established Reliability, General Specification for
MIL-R-39017	9.2	Resistor, Fixed, Film (Insulated), Established Reliability, General Specification for
MIL-C-39018	10.14	Capacitor, Fixed, Electrolytic (Aluminum Oxide) Established Reliability and Nonestablished Reliability, General Specification for
MIL-C-39019	14.5	Circuit Breakers, Magnetic, Low Power, Sealed, Trip-Free, General Specification for
MIL-C-39022	10.4	Capacitor, Fixed, Metallized Paper, Paper-Plastic Film, or Plastic Film Dielectric, Direct and Alternating Current (Hermetically Sealed in Metal Cases) Established Reliability, General Specification for
MIL-R-39023	9.15	Resistor, Variable, Nonwirewound, Precision, General Specification for
MIL-R-39035	9.13	Resistor, Variable, Nonwirewound, (Adjustment Type) Established Reliability, General Specification for
MIL-C-49142	15.1	Connector, Triaxial, RF, General Specification for
MIL-P-55110	15.2	Printed Wiring Boards
MIL-R-55182	9.2	Resistor, Fixed, Film, Established Reliability, General Specification for
MIL-C-55235	15.1	Connector, Coaxial, RF, General Specification for
MIL-C-55302	15.2	Connector, Printed Circuit, Subassembly and Accessories
MIL-C-55339	15.1	Adapter, Coaxial, RF, General Specification for
MIL-C-55514	10.5	Capacitor, Fixed, Plastic (or Metallized Plastic) Dielectric, Direct Current, In Non-Metal Cases, General Specification for
MIL-C-55629	14.5	Circuit Breaker, Magnetic, Unsealed, Trip-Free, General Specification for
MIL-T-55631	11.1	Transformer, Intermediate Frequency, Radio Frequency, and Discriminator, General Specification for

2.0 REFERENCE DOCUMENTS

SPECIFICATION	SECTION #	TITLE
MIL-C-55681	10.11	Capacitor, Chip, Multiple Layer, Fixed, Ceramic Dielectric, Established Reliability, General Specification for
MIL-C-81511	15.1	Connector, Electrical, Circular, High Density, Quick Disconnect, Environment Resisting, and Accessories, General Specification for
MIL-C-83383	14.5	Circuit Breaker, Remote Control, Thermal, Trip-Free, General Specification for
MIL-R-83401	9.4	Resistor Networks, Fixed, Film, General Specification for
MIL-C-83421	10.6	Capacitor, Fixed Supermetallized Plastic Film Dielectric (DC, AC or DC and AC) Hermetically Sealed in Metal Cases, Established Reliability, General Specification for
MIL-C-83513	15.1	Connector, Electrical, Rectangular, Microminiature, Polarized Shell, General Specification for
MIL-C-83723	15.1	Connector, Electrical (Circular Environment Resisting), Receptacles and Plugs, General Specification for
MIL-R-83725	13.1	Relay, Vacuum, General Specification for
MIL-R-83726	13.1, 13.2, 13.3	Relay, Time Delay, Electric and Electronic, General Specification for
MIL-S-83731	14.1	Switch, Toggle, Unsealed and Sealed Toggle, General Specification for
MIL-C-83733	15.1	Connector, Electrical, Miniature, Rectangular Type, Rack to Panel, Environment Resisting, 200 Degrees C Total Continuous Operating Temperature, General Specification for
MIL-S-83734	15.3	Socket, Plug-in Electronic Components, General Specification for

STANDARD	TITLE
MIL-STD-756	Reliability Modeling and Prediction
MIL-STD-883	Test Methods and Procedures for Microelectronics
MIL-STD-975	NASA Standard Electrical, Electronic and Electromechanical Parts List
MIL-STD-1547	Parts, Materials and Processes for Space Launch Vehicles, Technical Requirements for
MIL-STD-1772	Certification Requirements for Hybrid Microcircuit Facilities and Lines

Copies of specifications and standards required by contractors in connection with specific acquisition functions should be obtained from the contracting activity or as directed by the contracting officer. Single copies are also available (without charge) upon written request to:

Standardization Document Order Desk
700 Robins Ave.
Building 4, Section D
Philadelphia, PA 19111-5094
(215) 697-2667

3.1 Reliability Engineering - Reliability is currently recognized as an essential need in military electronic systems. It is looked upon as a means for reducing costs from the factory, where rework of defective components adds a non-productive overhead expense, to the field, where repair costs include not only parts and labor but also transportation and storage. More importantly, reliability directly impacts force effectiveness, measured in terms of availability or sortie rates, and determines the size of the "logistics tail" inhibiting force utilization.

The achievement of reliability is the function of reliability engineering. Every aspect of an electronic system, from the purity of materials used in its component devices to the operator's interface, has an impact on reliability. Reliability engineering must, therefore, be applied throughout the system's development in a diligent and timely fashion, and integrated with other engineering disciplines.

A variety of reliability engineering tools have been developed. This handbook provides the models supporting a basic tool, reliability prediction.

3.2 The Role of Reliability Prediction - Reliability prediction provides the quantitative baseline needed to assess progress in reliability engineering. A prediction made of a proposed design may be used in several ways.

A characteristic of Computer Aided Design is the ability to rapidly generate alternative solutions to a particular problem. Reliability predictions for each design alternative provide one measure of relative worth which, combined with other considerations, will aid in selecting the best of the available options.

Once a design is selected, the reliability prediction may be used as a guide to improvement by showing the highest contributors to failure. If the part stress analysis method is used, it may also reveal other fruitful areas for change (e.g., over stressed parts).

The impact of proposed design changes on reliability can be determined only by comparing the reliability predictions of the existing and proposed designs.

The ability of the design to maintain an acceptable reliability level under environmental extremes may be assessed through reliability predictions. The predictions may be used to evaluate the need for environmental control systems.

The effects of complexity on the probability of mission success can be evaluated through reliability predictions. The need for redundant or back-up systems may be determined with the aid of reliability predictions. A tradeoff of redundancy against other reliability enhancing techniques (e.g.: more cooling, higher part quality, etc.) must be based on reliability predictions coupled with other pertinent considerations such as cost, space limitations, etc.

The prediction will also help evaluate the significance of reported failures. For example, if several failures of one type or component occur in a system, the predicted failure rate can be used to determine whether the number of failures is commensurate with the number of components used in the system, or, that it indicates a problem area.

Finally, reliability predictions are useful to various other engineering analyses. As examples, the location of built-in-test circuitry should be influenced by the predicted failure rates of the circuitry monitored, and maintenance strategy planners can make use of the relative probability of a failure's location, based on predictions, to minimize downtime. Reliability predictions are also used to evaluate the probabilities of failure events described in a failure modes, effects and criticality analysis (FMECAs).

3.3 Limitations of Reliability Predictions - This handbook provides a common basis for reliability predictions, based on analysis of the best available data at the time of issue. It is intended to make reliability prediction as good a tool as possible. However, like any tool, reliability prediction must be used intelligently, with due consideration of its limitations.

The first limitation is that the failure rate models are point estimates which are based on available data. Hence, they are valid for the conditions under which the data was obtained, and for the devices covered. Some extrapolation during model development is possible, but the inherently empirical nature of the models can be severely restrictive. For example, none of the models in this handbook predict nuclear survivability or the effects of ionizing radiation.

Even when used in similar environments, the differences between system applications can be significant. Predicted and achieved reliability have always been closer for ground electronic systems than for avionic systems, because the environmental stresses vary less from system to system on the ground and hence the field conditions are in general closer to the environment under which the data was collected for the prediction model. However, failure rates are also impacted by operational scenarios, operator characteristics, maintenance practices, measurement techniques and differences in definition of failure. Hence, a reliability prediction should never be assumed to represent the expected field reliability as measured by the user (i.e., Mean-Time-Between-Maintenance, Mean-Time-Between-Removals, etc.). This does not negate its value as a reliability engineering tool; note that none of the applications discussed above requires the predicted reliability to match the field measurement.

Electronic technology is noted for its dynamic nature. New types of devices and new processes are continually introduced, compounding the difficulties of predicting reliability. Evolutionary changes may be handled by extrapolation from the existing models; revolutionary changes may defy analysis.

Another limitation of reliability predictions is the mechanics of the process. The part stress analysis method requires a significant amount of design detail. This naturally imposes a time and cost penalty. More significantly, many of the details are not available in the early design stages. For this reason this handbook contains both the part stress analysis method (Sections 5 through 23) and a simpler parts count method (Appendix A) which can be used in early design and bid formulation stages.

Finally, a basic limitation of reliability prediction is its dependence on correct application by the user. Those who correctly apply the models and use the information in a conscientious reliability program will find the prediction a useful tool. Those who view the prediction only as a number which must exceed a specified value can usually find a way to achieve their goal without any impact on the system.

3.4 Part Stress Analysis Prediction

3.4.1 Applicability - This method is applicable when most of the design is completed and a detailed parts list including part stresses is available. It can also be used during later design phases for reliability trade-offs vs. part selection and stresses. Sections 5 through 23 contain failure rate models for a broad variety of parts used in electronic equipment. The parts are grouped by major categories and, where appropriate, are subgrouped within categories. For mechanical and electromechanical parts not covered by this Handbook, refer to Bibliography items 20 and 36 (Appendix C).

The failure rates presented apply to equipment under normal operating conditions, i.e., with power on and performing its intended functions in its intended environment. Extrapolation of any of the base failure rate models beyond the tabulated values such as high or sub-zero temperature, electrical stress values above 1.0, or extrapolation of any associated model modifiers is completely invalid. Base failure rates can be interpolated between electrical stress values from 0 to 1 using the underlying equations.

The general procedure for determining a board level (or system level) failure rate is to sum individually calculated failure rates for each component. This summation is then added to a failure rate for the circuit board (which includes the effects of soldering parts to it) using Section 16, Interconnection Assemblies.

For parts or wires soldered together (e.g., a jumper wire between two parts), the connections model appearing in Section 17 is used. Finally, the effects of connecting circuit boards together is accounted for by adding in a failure rate for each connector (Section 15, Connectors). The wire between connectors is assumed to have a zero failure rate. For various service use profiles, duty cycles and redundancies the procedures described in MIL-STD-756, Reliability Modeling and Prediction, should be used to determine an effective system level failure rate.

3.4.2 Part Quality - The quality of a part has a direct effect on the part failure rate and appears in the part models as a factor, π_Q. Many parts are covered by specifications that have several quality levels, hence, the part models have values of π_Q that are keyed to these quality levels. Such parts with their quality designators are shown in Table 3-1. The detailed requirements for these levels are clearly defined in the applicable specification, except for microcircuits. Microcircuits have quality levels which are dependent on the number of MIL-STD-883 screens (or equivalent) to which they are subjected.

Table 3-1: Parts With Multi-Level Quality Specifications

Part	Quality Designators
Microcircuits	S, B, B-1, Other: Quality Judged by Screening Level
Discrete Semiconductors	JANTXV, JANTX, JAN
Capacitors, Established Reliability (ER)	D, C, S, R, B, P, M, L
Resistors, Established Reliability (ER)	S, R, P, M
Coils, Molded, R.F., Reliability (ER)	S, R, P, M
Relays, Established Reliability (ER)	R, P, M, L

Some parts are covered by older specifications, usually referred to as Nonestablished Reliability (Non-ER), that do not have multi-levels of quality. These part models generally have two quality levels designated as "MIL-SPEC.", and "Lower". If the part is procured in complete accordance with the applicable specification, the π_Q value for MIL-SPEC should be used. If any requirements are waived, or if a commercial part is procured, the π_Q value for Lower should be used.

The foregoing discussion involves the "as procured" part quality. Poor equipment design, production, and testing facilities can degrade part quality. The use of the higher quality parts requires a total equipment design and quality control process commensurate with the high part quality. It would make little sense to procure high quality parts only to have the equipment production procedures damage the parts or introduce latent defects. Total equipment program descriptions as they might vary with different part quality mixes is beyond the scope of this Handbook. Reliability management and quality control procedures are described in other DoD standards and publications. Nevertheless, when a proposed equipment development is pushing the state-of-the-art and has a high reliability requirement necessitating high quality parts, the total equipment program should be given careful scrutiny and not just

the parts quality. Otherwise, the low failure rates as predicted by the models for high quality parts will not be realized.

3.4.3 Use Environment - All part reliability models include the effects of environmental stresses through the environmental factor, π_E, except for the effects of ionizing radiation. The descriptions of these environments are shown in Table 3-2. The π_E factor is quantified within each part failure rate model. These environments encompass the major areas of equipment use. Some equipment will experience more than one environment during its normal use, e.g., equipment in spacecraft. In such a case, the reliability analysis should be segmented, namely, missile launch (M_L) conditions during boost into and return from orbit, and space flight (S_F) while in orbit.

Table 3-2: Environmental Symbol and Description

Environment	π_E Symbol	Equivalent MIL-HDBK-217E, Notice 1 π_E Symbol	Description
Ground, Benign	G_B	G_B G_{MS}	Nonmobile, temperature and humidity controlled environments readily accessible to maintenance; includes laboratory instruments and test equipment, medical electronic equipment, business and scientific computer complexes, and missiles and support equipment in ground silos.
Ground, Fixed	G_F	G_F	Moderately controlled environments such as installation in permanent racks with adequate cooling air and possible installation in unheated buildings; includes permanent installation of air traffic control radar and communications facilities.
Ground, Mobile	G_M	G_M M_P	Equipment installed on wheeled or tracked vehicles and equipment manually transported; includes tactical missile ground support equipment, mobile communication equipment, tactical fire direction systems, handheld communications equipment, laser designations and range finders.
Naval, Sheltered	N_S	N_S N_{SB}	Includes sheltered or below deck conditions on surface ships and equipment installed in submarines.
Naval, Unsheltered	N_U	N_U N_{UU} N_H	Unprotected surface shipborne equipment exposed to weather conditions and equipment immersed in salt water. Includes sonar equipment and equipment installed on hydrofoil vessels.

Table 3-2: Environmental Symbol and Description (cont'd)

Environment	π_E Symbol	Equivalent MIL-HDBK-217E, Notice 1 π_E Symbol	Description
Airborne, Inhabited, Cargo	A_{IC}	A_{IC} A_{IT} A_{IB}	Typical conditions in cargo compartments which can be occupied by an aircrew. Environment extremes of pressure, temperature, shock and vibration are minimal. Examples include long mission aircraft such as the C130, C5, B52, and C141. This category also applies to inhabited areas in lower performance smaller aircraft such as the T38.
Airborne, Inhabited, Fighter	A_{IF}	A_{IF} A_{IA}	Same as A_{IC} but installed on high performance aircraft such as fighters and interceptors. Examples include the F15, F16, F111, F/A 18 and A10 aircraft.
Airborne, Uninhabited, Cargo	A_{UC}	A_{UC} A_{UT} A_{UB}	Environmentally uncontrolled areas which cannot be inhabited by an aircrew during flight. Environmental extremes of pressure, temperature and shock may be severe. Examples include uninhabited areas of long mission aircraft such as the C130, C5, B52 and C141. This category also applies to uninhabited area of lower performance smaller aircraft such as the T38.
Airborne, Uninhabited, Fighter	A_{UF}	A_{UF} A_{UA}	Same as A_{UC} but installed on high performance aircraft such as fighters and interceptors. Examples include the F15, F16, F111 and A10 aircraft.
Airborne, Rotary Winged	A_{RW}	A_{RW}	Equipment installed on helicopters. Applies to both internally and externally mounted equipment such as laser designators, fire control systems, and communications equipment.
Space, Flight	S_F	S_F	Earth orbital. Approaches benign ground conditions. Vehicle neither under powered flight nor in atmospheric reentry; includes satellites and shuttles.

Table 3-2: Environmental Symbol and Description (cont'd)

Environment	π_E Symbol	Equivalent MIL-HDBK-217E, Notice 1 π_E Symbol	Description
Missile, Flight	M_F	M_{FF} M_{FA}	Conditions related to powered flight of air breathing missiles, cruise missiles, and missiles in unpowered free flight.
Missile, Launch	M_L	M_L U_{SL}	Severe conditions related to missile launch (air, ground and sea), space vehicle boost into orbit, and vehicle re-entry and landing by parachute. Also applies to solid rocket motor propulsion powered flight, and torpedo and missile launch from submarines.
Cannon, Launch	C_L	C_L	Extremely severe conditions related to cannon launching of 155 mm. and 5 inch guided projectiles. Conditions apply to the projectile from launch to target impact.

3.4.4 Part Failure Rate Models - Part failure rate models for microelectronic parts are significantly different from those for other parts and are presented entirely in Section 5.0. A typical example of the type of model used for most other part types is the following one for discrete semiconductors:

$$\lambda_p = \lambda_b \pi_T \pi_A \pi_R \pi_S \pi_C \pi_Q \pi_E$$

where:

λ_p is the part failure rate,

λ_b is the base failure rate usually expressed by a model relating the influence of electrical and temperature stresses on the part,

π_E and the other π factors modify the base failure rate for the category of environmental application and other parameters that affect the part reliability.

The π_E and π_Q factors are used in most all models and other π factors apply only to specific models. The applicability of π factors is identified in each section.

The base failure rate (λ_b) models are presented in each part section along with identification of the applicable model factors. Tables of calculated λ_b values are also provided for use in manual calculations. The model equations can, of course, be incorporated into computer programs for machine processing. The tabulated values of λ_b are cut off at the part ratings with regard to temperature and stress, hence, use of parts beyond these cut off points will overstress the part. The use of the λ_b models in a computer

program should take the part rating limits into account. The λ_b equations are mathematically continuous beyond the part ratings but such failure rate values are invalid in the overstressed regions.

All the part models include failure data from both catastrophic and permanent drift failures (e.g., a resistor permanently falling out of rated tolerance bounds) and are based upon a constant failure rate, except for motors which show an increasing failure rate over time. Failures associated with connection of parts into circuit assemblies are not included within the part failure rate models. Information on connection reliability is provided in Sections 16 and 17.

3.4.5 Thermal Aspects - The use of this prediction method requires the determination of the temperatures to which the parts are subjected. Since parts reliability is sensitive to temperature, the thermal analysis of any design should fairly accurately provide the ambient temperatures needed in using the part models. Of course, lower temperatures produce better reliability but also can produce increased penalties in terms of added loads on the environmental control system, unless achieved through improved thermal design of the equipment. The thermal analysis should be part of the design process and included in all the trade-off studies covering equipment performance, reliability, weight, volume, environmental control systems, etc. References 17 and 34 listed in Appendix C may be used as guides in determining component temperatures.

4.0 RELIABILITY ANALYSIS EVALUATION

Table 4-1 provides a general checklist to be used as a guide for evaluating a reliability prediction report. For completeness, the checklist includes categories for reliability modeling and allocation, which are sometimes delivered as part of a prediction report. It should be noted that the scope of any reliability analysis depends on the specific requirements called out in a statement-of-work (SOW) or system specification. The inclusion of this checklist is not intended to change the scope of these requirements.

Table 4-1: Reliability Analysis Checklist

Major Concerns	Comments
MODELS	
Are all functional elements included in the reliability block diagram /model?	System design drawings/diagrams must be reviewed to be sure that the reliability model/diagram agrees with the hardware.
Are all modes of operation considered in the math model?	Duty cycles, alternate paths, degraded conditions and redundant units must be defined and modeled.
Do the math model results show that the design achieves the reliability requirement?	Unit failure rates and redundancy equations are used from the detailed part predictions in the system math model (See MIL-STD-756, Reliability Prediction and Modeling).
ALLOCATION	
Are system reliability requirements allocated (subdivided) to useful levels?	Useful levels are defined as: equipment for subcontractors, assemblies for sub-subcontractors, circuit boards for designers.
Does the allocation process consider complexity, design flexibility, and safety margins?	Conservative values are needed to prevent reallocation at every design change.
PREDICTION	
Does the sum of the parts equal the value of the module or unit?	Many predictions neglect to include all the parts producing optimistic results (check for solder connections, connectors, circuit boards).
Are environmental conditions and part quality representative of the requirements?	Optimistic quality levels and favorable environmental conditions are often assumed causing optimistic results.
Are the circuit and part temperatures defined and do they represent the design?	Temperature is the biggest driver of part failure rates; low temperature assumptions will cause optimistic results.
Are equipment, assembly, subassembly and part reliability drivers identified?	Identification is needed so that corrective actions for reliability improvement can be considered.
Are alternate (Non MIL-HDBK-217) failure rates highlighted along with the rationale for their use?	Use of alternate failure rates, if deemed necessary, require submission of backup data to provide credence in the values.
Is the level of detail for the part failure rate models sufficient to reconstruct the result?	Each component type should be sampled and failure rates completely reconstructed for accuracy.
Are critical components such as VHSIC, Monolithic Microwave Integrated Circuits (MMIC), Application Specific Integrated Circuits (ASIC) or Hybrids highlighted?	Prediction methods for advanced technology parts should be carefully evaluated for impact on the module and system.

5.0 MICROCIRCUITS, INTRODUCTION

This section presents failure rate prediction models for the following ten major classes of microelectronic devices:

Section	
5.1	Monolithic Bipolar Digital and Linear Gate/Logic Array Devices
5.1	Monolithic MOS Digital and Linear Gate/Logic Array Devices
5.1	Monolithic Bipolar and MOS Digital Microprocessor Devices
5.2	Monolithic Bipolar and MOS Memory Devices
5.3	Very High Speed Integrated Circuit (VHSIC/VHSIC-Like and VLSI) CMOS Devices (> 60K Gates)
5.4	Monolithic GaAs Digital Devices
5.4	Monolithic GaAs MMIC
5.5	Hybrid Microcircuits
5.6	Surface Acoustic Wave Devices
5.7	Magnetic Bubble Memories

In the title description of each monolithic device type, Bipolar represents all TTL, ASTTL, DTL, ECL, CML, ALSTTL, HTTL, FTTL, F, LTTL, STTL, BiCMOS, LSTTL, IIL, I^3L and ISL devices. MOS represents all metal-oxide microcircuits, which includes NMOS, PMOS, CMOS and MNOS fabricated on various substrates such as sapphire, polycrystalline or single crystal silicon. The hybrid model is structured to accommodate all of the monolithic chip device types and various complexity levels.

Monolithic memory complexity factors are expressed in the number of bits in accordance with JEDEC STD 21A. This standard, which is used by all government and industry agencies that deal with microcircuit memories, states that memories of 1024 bits and greater shall be expressed as K bits, where 1K = 1024 bits. For example, a 16K memory has 16,384 bits, a 64K memory has 65,536 bits and a 1M memory has 1,048,576 bits. Exact numbers of bits are not used for memories of 1024 bits and greater.

For devices having both linear and digital functions not covered by MIL-M-38510 or MIL-I-38535, use the linear model. Line drivers and line receivers are considered linear devices. For linear devices not covered by MIL-M-38510 or MIL-I-38535, use the transistor count from the schematic diagram of the device to determine circuit complexity.

For digital devices not covered by MIL-M-38510 or MIL-I-38535, use the gate count as determined from the logic diagram. A J-K or R-S flip flop is equivalent to 6 gates when used as part of an LSI circuit. For the purpose of this Handbook, a gate is considered to be any one of the following functions; AND, OR, exclusive OR, NAND, NOR and inverter. When a logic diagram is unavailable, use device transistor count to determine gate count using the following expressions:

Technology	Gate Approximation
Bipolar	No. Gates = No. Transistors/3.0
CMOS	No. Gates = No. Transistors/4.0
All other MOS except CMOS	No. Gates = No. Transistors/3.0

5.0 MICROCIRCUITS, INTRODUCTION

A detailed form of the Section 5.3 VHSIC/VHSIC-Like model is included as Appendix B to allow more detailed trade-offs to be performed. Reference 30 should be consulted for more information about this model.

Reference 32 should be consulted for more information about the models appearing in Sections 5.1, 5.2, 5.4, 5.5, and 5.6. Reference 13 should be consulted for additional information on Section 5.7.

5.1 MICROCIRCUITS, GATE/LOGIC ARRAYS AND MICROPROCESSORS

DESCRIPTION

1. Bipolar Devices, Digital and Linear Gate/Logic Arrays
2. MOS Devices, Digital and Linear Gate/Logic Arrays
3. Field Programmable Logic Array (PLA) and Programmable Array Logic (PAL)
4. Microprocessors

$$\lambda_p = (C_1\pi_T + C_2\pi_E)\,\pi_Q\pi_L \quad \text{Failures}/10^6 \text{ Hours}$$

Bipolar Digital and Linear Gate/Logic Array Die Complexity Failure Rate - C_1

Digital		Linear		PLA/PAL	
No. Gates	C_1	No. Transistors	C_1	No. Gates	C_1
1 to 100	.0025	1 to 100	.010	Up to 200	.010
101 to 1,000	.0050	101 to 300	.020	201 to 1,000	.021
1,001 to 3,000	.010	301 to 1,000	.040	1,001 to 5,000	.042
3,001 to 10,000	.020	1,001 to 10,000	.060		
10,001 to 30,000	.040				
30,001 to 60,000	.080				

MOS Digital and Linear Gate/Logic Array Die Complexity Failure Rate - C_1*

Digital		Linear		PLA/PAL	
No. Gates	C_1	No. Transistors	C_1	No. Gates	C_1
1 to 100	.010	1 to 100	.010	Up to 500	.00085
101 to 1,000	.020	101 to 300	.020	501 to 1,000	.0017
1,001 to 3,000	.040	301 to 1,000	.040	2,001 to 5,000	.0034
3,001 to 10,000	.080	1,001 to 10,000	.060	5,001 to 20,000	.0068
10,001 to 30,000	.16				
30,001 to 60,000	.29				

*NOTE: For CMOS gate counts above 60,000 use the VHSIC/VHSIC-Like model in Section 5.3

Microprocessor
Die Complexity Failure Rate - C_1

No. Bits	Bipolar C_1	MOS C_1
Up to 8	.060	.14
Up to 16	.12	.28
Up to 32	.24	.56

All Other Model Parameters

Parameter	Refer to
π_T	Section 5.8
C_2	Section 5.9
π_E, π_Q, π_L	Section 5.10

5.2 MICROCIRCUITS, MEMORIES

DESCRIPTION

1. Read Only Memories (ROM)
2. Programmable Read Only Memories (PROM)
3. Ultraviolet Eraseable PROMs (UVEPROM)
4. "Flash," MNOS and Floating Gate Electrically Eraseable PROMs (EEPROM). Includes both floating gate tunnel oxide (FLOTOX) and textured polysilicon type EEPROMs
5. Static Random Access Memories (SRAM)
6. Dynamic Random Access Memories (DRAM)

$$\lambda_p = (C_1 \pi_T + C_2 \pi_E + \lambda_{cyc}) \pi_Q \pi_L \text{ Failures}/10^6 \text{ Hours}$$

Die Complexity Failure Rate - C_1

Memory Size, B (Bits)	MOS				Bipolar	
	ROM	PROM, UVEPROM, EEPROM, EAPROM	DRAM	SRAM (MOS & BiMOS)	ROM, PROM	SRAM
Up to 16K	.00065	.00085	.0013	.0078	.0094	.0052
16K < B ≤ 64K	.0013	.0017	.0025	.016	.019	.011
64K < B ≤ 256K	.0026	.0034	.0050	.031	.038	.021
256K < B ≤ 1M	.0052	.0068	.010	.062	.075	.042

A_1 Factor for λ_{cyc} Calculation

Total No. of Programming Cycles Over EEPROM Life, C	Flotox[1]	Textured-Poly[2]
Up to 100	.00070	.0097
100 < C ≤ 200	.0014	.014
200 < C ≤ 500	.0034	.023
500 < C ≤ 1K	.0068	.033
1K < C ≤ 3K	.020	.061
3K < C ≤ 7K	.049	.14
7K < C ≤ 15K	.10	.30
15K < C ≤ 20K	.14	.30
20K < C ≤ 30K	.20	.30
30K < C ≤ 100K	.68	.30
100K < C ≤ 200K	1.3	.30
200K < C ≤ 400K	2.7	.30
400K < C ≤ 500K	3.4	.30

1. $A_1 = 6.817 \times 10^{-6}$ (C)
2. No underlying equation for Textured-Poly.

A_2 Factor for λ_{cyc} Calculation

Total No. of Programming Cycles Over EEPROM Life, C	Textured-Poly A_2
Up to 300K	0
300K < C ≤ 400K	1.1
400K < C ≤ 500K	2.3

All Other Model Parameters

Parameter	Refer to
π_T	Section 5.8
C_2	Section 5.9
π_E, π_Q, π_L	Section 5.10
λ_{cyc} (EEPROMS only)	Page 5-5

$\lambda_{cyc} = 0$ For all other devices

EEPROM Read/Write Cycling Induced Failure Rate - λ_{cyc}

All Memory Devices Except Flotox and Textured-Poly EEPROMS	$\lambda_{cyc} = 0$
Flotox and Textured Poly EEPROMS	$\lambda_{cyc} = \left[A_1 B_1 + \frac{A_2 B_2}{\pi_Q} \right] \pi_{ECC}$

Model Factor	Flotox	Textured-Poly
A_1	Page 5-4	Page 5-4
B_1	Page 5-6	Page 5-6
A_2	$A_2 = 0$	Page 5-5
B_2	$B_2 = 0$	Page 5-6
π_Q	Section 5.10	Section 5.10
Error Correction Code (ECC) Options:		
1. No On-Chip ECC	$\pi_{ECC} = 1.0$	$\pi_{ECC} = 1.0$
2. On-Chip Hamming Code	$\pi_{ECC} = .72$	$\pi_{ECC} = .72$
3. Two-Needs-One Redundant Cell Approach	$\pi_{ECC} = .68$	$\pi_{ECC} = .68$

NOTES:

1. See Reference 24 for modeling off-chip error detection and correction schemes at the memory system level.
2. If EEPROM type is unknown, assume Flotox.
3. Error Correction Code Options: Some EEPROM manufacturers have incorporated on-chip error correction circuitry into their EEPROM devices. This is represented by the on-chip hamming code entry. Other manufacturers have taken a redundant cell approach which incorporates an extra storage transistor in every memory cell. This is represented by the two-needs-one redundant cell entry.
4. The A_1 and A_2 factors shown in Section 5.2 were developed based on an assumed system life of 10,000 operating hours. For EEPROMs used in systems with significantly longer or shorter expected lifetimes the A_1 and A_2 factors should be multiplied by:

$$\frac{10{,}000}{\text{System Lifetime Operating Hours}}$$

B_1 and B_2 Factors for λ_{cyc} Calculation

	Flotox[1] (B_1)					Textured-Poly[2] (B_1)					Textured-Poly[3] (B_2)				
Memory Size, B(Bits) → T_J (°C)	4K	16K	64K	256K	1M	4K	16K	64K	256K	1M	4K	16K	64K	256K	1M
25	.27	0.55	1.1	2.2	4.3	.47	.66	.94	1.3	1.9	.54	0.76	1.1	1.5	2.1
30	.30	0.60	1.2	2.4	4.8	.50	.71	1.0	1.4	2.0	.50	0.71	1.0	1.4	2.0
35	.33	0.66	1.3	2.7	5.2	.54	.77	1.1	1.5	2.2	.47	0.67	.95	1.3	1.9
40	.36	0.72	1.4	2.9	5.7	.58	.82	1.2	1.6	2.3	.45	0.63	.89	1.3	1.8
45	.40	0.79	1.6	3.2	6.3	.62	.88	1.3	1.8	2.5	.42	0.59	.84	1.2	1.7
50	.43	0.86	1.7	3.4	6.8	.67	.94	1.3	1.9	2.7	.40	0.56	.80	1.1	1.6
55	.47	0.93	1.9	3.7	7.4	.71	1.0	1.4	2.0	2.8	.38	0.53	.75	1.1	1.5
60	.51	1.0	2.0	4.1	8.0	.76	1.1	1.5	2.1	3.0	.36	0.50	.72	1.0	1.4
65	.55	1.1	2.2	4.4	8.6	.81	1.1	1.6	2.3	3.2	.34	0.48	.68	.96	1.3
70	.59	1.2	2.4	4.7	9.3	.86	1.2	1.7	2.4	3.4	.32	0.46	.65	.91	1.3
75	.63	1.3	2.5	5.1	10	.91	1.3	1.8	2.6	3.6	.31	0.43	.62	.87	1.2
80	.68	1.4	2.7	5.4	11	.96	1.4	1.9	2.7	3.8	.29	0.41	.59	.83	1.2
85	.73	1.5	2.9	5.8	12	1.0	1.4	2.0	2.9	4.0	.28	0.40	.56	.79	1.1
90	.78	1.6	3.1	6.2	12	1.1	1.5	2.2	3.0	4.3	.27	0.38	.54	.75	1.1
95	.83	1.7	3.3	6.7	13	1.1	1.6	2.3	3.2	4.5	.26	0.36	.51	.72	1.0
100	.89	1.8	3.5	7.1	14	1.2	1.7	2.4	3.4	4.7	.25	0.35	.49	.69	.98
105	.94	1.9	3.8	7.5	15	1.3	1.8	2.5	3.5	5.0	.24	0.33	.47	.66	.94
110	1.0	2.0	4.0	8.0	16	1.3	1.9	2.6	3.7	5.2	.23	0.32	.45	.64	.90
115	1.1	2.1	4.2	8.5	17	1.4	1.9	2.8	3.9	5.5	.22	0.31	.44	.61	.87
120	1.1	2.2	4.5	9.0	18	1.4	2.0	2.9	4.1	5.7	.21	0.30	.42	.59	.83
125	1.2	2.4	4.7	9.5	19	1.5	2.1	3.0	4.2	6.0	.20	0.29	.41	.57	.80
130	1.3	2.5	5.0	10	20	1.6	2.2	3.2	4.4	6.2	.19	0.28	.39	.55	.77
135	1.3	2.6	5.3	11	21	1.6	2.3	3.3	4.6	6.5	.19	0.27	.38	.53	.75
140	1.4	2.8	5.6	11	22	1.7	2.4	3.4	4.8	6.8	.18	0.26	.36	.51	.72
145	1.5	2.9	5.8	12	23	1.8	2.5	3.6	5.0	7.1	.18	0.25	.35	.50	.70
150	1.5	3.1	6.1	12	24	1.8	2.6	3.7	5.2	7.4	.17	0.24	.34	.48	.68
155	1.6	3.2	6.4	13	25	1.9	2.7	3.9	5.4	7.6	.16	0.23	.33	.46	.65
160	1.7	3.4	6.7	14	27	2.0	2.8	4.0	5.6	7.9	.16	0.23	.32	.45	.63
165	1.8	3.5	7.1	14	28	2.1	2.9	4.2	5.8	8.2	.15	0.22	.31	.44	.62
170	1.8	3.7	7.4	15	29	2.1	3.0	4.3	6.1	8.5	.15	0.21	.30	.42	.60
175	1.9	3.9	7.7	15	31	2.2	3.1	4.5	6.3	8.8	.15	0.21	.29	.41	.58

1. $B_1 = \left(\frac{B}{16000}\right)^{.5}\left[\exp\left(\frac{-.15}{8.63 \times 10^{-5}}\left(\frac{1}{T_J + 273} - \frac{1}{333}\right)\right)\right]$

2. $B_1 = \left(\frac{B}{64000}\right)^{.25}\left[\exp\left(\frac{-.12}{8.63 \times 10^{-5}}\left(\frac{1}{T_J + 273} - \frac{1}{303}\right)\right)\right]$

3. $B_2 = \left(\frac{B}{64000}\right)^{.25}\left[\exp\left(\frac{.1}{8.63 \times 10^{-5}}\left(\frac{1}{T_J + 273} - \frac{1}{303}\right)\right)\right]$

T_J = Worse Case Junction Temperature (°C). See Section 5.11 for T_J Determination

B = Number of bits. NOTE: 1K = 1024 bits

5.3 MICROCIRCUITS, VHSIC/VHSIC-LIKE AND VLSI CMOS

DESCRIPTION
CMOS greater than 60,000 gates

$$\lambda_p = \lambda_{BD}\pi_{MFG}\pi_T\pi_{CD} + \lambda_{BP}\pi_E\pi_Q\pi_{PT} + \lambda_{EOS} \text{ Failures}/10^6 \text{ Hours}$$

Die Base Failure Rate - λ_{BD}

Part Type	λ_{BD}
Logic and Custom	0.16
Gate Array	0.24

All Other Model Parameters

Parameter	Refer to
π_T	Section 5.8
π_E, π_Q	Section 5.10

Manufacturing Process Correction Factor - π_{MFG}

Manufacturing Process	π_{MFG}
QML or QPL	.55
Non QML or Non QPL	2.0

Package Type Correction Factor - π_{PT}

Package Type	π_{PT} Hermetic	π_{PT} Nonhermetic
DIP	1.0	1.3
Pin Grid Array	2.2	2.9
Chip Carrier (Surface Mount Technology)	4.7	6.1

Die Complexity Correction Factor - π_{CD}

Feature Size (Microns)	Die Area (cm^2) $A \le .4$	$.4 < A \le .7$	$.7 < A \le 1.0$	$1.0 < A \le 2.0$	$2.0 < A \le 3.0$
.80	8.0	14	19	38	58
1.00	5.2	8.9	13	25	37
1.25	3.5	5.8	8.2	16	24

$$\pi_{CD} = \left(\left(\frac{A}{.21}\right)\left(\frac{2}{X_s}\right)^2(.64)\right) + .36$$

A = Total Scribed Chip Die Area in cm^2 X_s = Feature Size (microns)

Die Area Conversion: $cm^2 = MIL^2 \div 155{,}000$

Package Base Failure Rate - λ_{BP}

Number of Pins	λ_{BP}
24	.0026
28	.0027
40	.0029
44	.0030
48	.0030
52	.0031
64	.0033
84	.0036
120	.0043
124	.0043
144	.0047
220	.0060

$$\lambda_{BP} = .0022 + \left((1.72 \times 10^{-5})(NP)\right)$$

NP = Number of Package Pins

Electrical Overstress Failure Rate - λ_{EOS}

V_{TH} (ESD Susceptibility (Volts))*	λ_{EOS}
0 - 1000	.065
> 1000 - 2000	.053
> 2000 - 4000	.044
> 4000 - 16000	.029
> 16000	.0027

$$\lambda_{EOS} = (-\ln(1 - .00057\exp(-.0002\,V_{TH}))/.00876$$

V_{TH} = ESD Susceptibility (volts)

* Voltage ranges which will cause the part to fail. If unknown, use 0 - 1000 volts.

5.4 MICROCIRCUITS, GaAs MMIC AND DIGITAL DEVICES

DESCRIPTION
Gallium Arsenide Microwave Monolithic Integrated Circuit (GaAs MMIC) and GaAs Digital Integrated Circuits using MESFET Transistors and Gold Based Metallization

$$\lambda_p = [\, C_1 \pi_T \pi_A + C_2 \pi_E \,]\, \pi_L \pi_Q \quad \text{Failures}/10^6 \text{ Hours}$$

MMIC: Die Complexity Failure Rates - C_1

Complexity (No. of Elements)	C_1
1 to 100	4.5
101 to 1000	7.2
1. C_1 accounts for the following active elements: transistors, diodes.	

Digital: Die Complexity Failure Rates - C_1

Complexity (No. of Elements)	C_1
1 to 1000	25
1,001 to 10,000	51
1. C_1 accounts for the following active elements: transistors, diodes.	

Device Application Factor - π_A

Application	π_A
MMIC Devices	
Low Noise & Low Power (≤ 100 mW)	1.0
Driver & High Power (> 100 mW)	3.0
Unknown	3.0
Digital Devices	
All Digital Applications	1.0

All Other Model Parameters

Parameter	Refer to
π_T	Section 5.8
C_2	Section 5.9
π_E, π_L, π_Q	Section 5.10

DESCRIPTION
Hybrid Microcircuits

$$\lambda_p = [\Sigma N_c \lambda_c] (1 + .2 \pi_E) \pi_F \pi_Q \pi_L \text{ Failures}/10^6 \text{ Hours}$$

N_c = Number of Each Particular Component

λ_c = Failure Rate of Each Particular Component

The general procedure for developing an overall hybrid failure rate is to calculate an individual failure rate for each component type used in the hybrid and then sum them. This summation is then modified to account for the overall hybrid function (π_F), screening level (π_Q), and maturity (π_L). The hybrid package failure rate is a function of the active component failure modified by the environmental factor (i.e., $(1 + .2 \pi_E)$). Only the component types listed in the following table are considered to contribute significantly to the overall failure rate of most hybrids. All other component types (e.g., resistors, inductors, etc.) are considered to contribute insignificantly to the overall hybrid failure rate, and are assumed to have a failure rate of zero. This simplification is valid for most hybrids; however, if the hybrid consists of mostly passive components then a failure rate should be calculated for these devices. If factoring in other component types, assume $\pi_Q = 1$, $\pi_E = 1$ and T_A = Hybrid Case Temperature for these calculations.

Determination of λ_c

Determine λ_c for These Component Types	Handbook Section	Make These Assumptions When Determining λ_c
Microcircuits	5	$C_2 = 0$, $\pi_Q = 1$, $\pi_L = 1$, T_J as Determined from Section 5.12, $\lambda_{BP} = 0$ (for VHSIC).
Discrete Semiconductors	6	$\pi_Q = 1$, T_J as Determined from Section 6.14, $\pi_E = 1$.
Capacitors	10	$\pi_Q = 1$, T_A = Hybrid Case Temperature, $\pi_E = 1$.

NOTE: If maximum rated stress for a die is unknown, assume the same as for a discretely package die of the same type. If the same die has several ratings based on the discrete packaged type, assume the lowest rating. Power rating used should be based on case temperature for discrete semiconductors.

Circuit Function Factor - π_F

Circuit Type	π_F
Digital	1.0
Video, 10 MHz < f < 1 GHz	1.2
Microwave, f > 1 GHz	2.6
Linear, f < 10 MHz	5.8
Power	21

All Other Hybrid Model Parameters

π_L, π_Q, π_E	Refer to Section 5.10

5.6 MICROCIRCUITS, SAW DEVICES

DESCRIPTION
Surface Acoustic Wave Devices

$$\lambda_p = 2.1\ \pi_Q\ \pi_E \text{ Failures}/10^6 \text{ Hours}$$

Quality Factor - π_Q

Screening Level	π_Q
10 Temperature Cycles (-55°C to +125°C) with end point electrical tests at temperature extremes.	.10
None beyond best commerical practices.	1.0

Environmental Factor - π_E

Environment	π_E
G_B	.5
G_F	2.0
G_M	4.0
N_S	4.0
N_U	6.0
A_{IC}	4.0
A_{IF}	5.0
A_{UC}	5.0
A_{UF}	8.0
A_{RW}	8.0
S_F	.50
M_F	5.0
M_L	12
C_L	220

5.7 MICROCIRCUITS, MAGNETIC BUBBLE MEMORIES

The magnetic bubble memory device in its present form is a non-hermetic assembly consisting of the following two major structural segments:

1. A basic bubble chip or die consisting of memory or a storage area (e.g., an array of minor loops), and required control and detection elements (e.g., generators, various gates and detectors).

2. A magnetic structure to provide controlled magnetic fields consisting of permanent magnets, coils, and a housing.

These two structural segments of the device are interconnected by a mechanical substrate and lead frame. The interconnect substrate in the present technology is normally a printed circuit board. It should be noted that this model does not include external support microelectronic devices required for magnetic bubble memory operation. The model is based on Reference 33. The general form of the failure rate model is:

$$\lambda_p = \lambda_1 + \lambda_2 \text{ Failures}/10^6 \text{ Hours}$$

where:

λ_1 = Failure Rate of the Control and Detection Structure

$$\lambda_1 = \pi_Q [N_C C_{11} \pi_{T1} \pi_W + (N_C C_{21} + C_2)\pi_E] \pi_D \pi_L$$

λ_2 = Failure Rate of the Memory Storage Area

$$\lambda_2 = \pi_Q N_C (C_{12} \pi_{T2} + C_{22} \pi_E) \pi_L$$

Chips Per Package - N_C

N_C	=	Number of Bubble Chips per Packaged Device

Temperature Factor – π_T

$$\pi_T = (.1) \exp\left[\frac{-Ea}{8.63 \times 10^{-5}} \left(\frac{1}{T_J + 273} - \frac{1}{298}\right)\right]$$

Use:

E_a = .8 to Calculate π_{T1}

E_a = .55 to Calculate π_{T2}

T_J = Junction Temperature (°C), $25 \le T_J \le 175$

T_J = T_{CASE} + 10°C

Device Complexity Failure Rates for Control and Detection Structure - C_{11} and C_{21}

C_{11} = $.00095(N_1)^{.40}$

C_{21} = $.0001(N_1)^{.226}$

N_1 = Number of Dissipative Elements on a Chip (gates, detectors, generators, etc.), $N_1 \le 1000$

5.7 MICROCIRCUIT, MAGNETIC BUBBLE MEMORIES

Write Duty Cycle Factor - π_W

$$\pi_W = \frac{10D}{(R/W)^{.3}}$$

$$\pi_W = 1 \quad \text{for } D \leq .3 \text{ or } R/W \geq 2154$$

$$D = \frac{\text{Avg. Device Data Rate}}{\text{Mfg. Max. Rated Data Rate}} \leq 1$$

R/W = No. of Reads per Write

NOTE:
For seed-bubble generators, divide π_W by 4, or use 1, whichever is greater.

Duty Cycle Factor - π_D

$$\pi_D = .9D + .1$$

$$D = \frac{\text{Avg. Device Data Rate}}{\text{Mfg. Max. Rated Data Rate}} \leq 1$$

Device Complexity Failure Rates for Memory Storage Structure - C_{12} and C_{22}

$$C_{12} = .00007(N_2)^{.3}$$

$$C_{22} = .00001(N_2)^{.3}$$

N_2 = Number of Bits, $N_2 \leq 9 \times 10^6$

All Other Model Parameters

Parameter	Section
C_2	5.9
π_E, π_Q, π_L	5.10

Temperature Factor For All Microcircuits - π_T

	TTL, ASTTL, CML, HTTL, FTTL, DTL, ECL, ALSTTL	F, LTTL, STTL	BiCMOS, LSTTL	III, I^3L, ISL	Digital MOS, VHSIC CMOS	Linear (Bipolar & MOS)	Memories (Bipolar & MOS), MNOS	GaAs MMIC Active Devices, π_{TA}	GaAs Digital Active Devices, π_{TA}
Ea(eV) → T_J (°C)	.4	.45	.5	.6	.35	.65	.8	1.5	1.4
25	.10	.10	.10	.10	.10	.10	.10	3.20E-09	1.00E-08
30	.13	.13	.14	.15	.13	.15	.15	8.40E-09	2.50E-08
35	.17	.18	.19	.21	.16	.23	.21	2.10E-08	5.90E-08
40	.21	.23	.25	.31	.19	.34	.31	5.20E-08	1.40E-07
45	.27	.3	.34	.43	.24	.49	.43	1.30E-07	3.10E-07
50	.33	.39	.45	.61	.29	.71	.61	2.90E-07	6.80E-07
55	.42	.50	.59	.85	.35	1.0	.85	6.70E-07	1.50E-06
60	.51	.63	.77	1.2	.42	1.4	1.2	1.50E-06	3.10E-06
65	.63	.80	1.0	1.6	.50	2.0	1.6	3.20E-06	6.40E-06
70	.77	1.0	1.3	2.1	.60	2.8	2.1	6.80E-06	1.30E-05
75	.94	1.2	1.6	2.9	.71	3.8	2.9	1.40E-05	2.50E-05
80	1.1	1.5	2.1	3.8	.84	5.2	3.8	2.90E-05	4.90E-05
85	1.4	1.9	2.6	5.0	.98	7.0	5.0	5.70E-05	9.40E-05
90	1.6	2.3	3.3	6.6	1.1	9.3	6.6	1.10E-04	1.70E-04
95	1.9	2.8	4.1	8.5	1.3	12	8.5	2.10E-04	3.20E-04
100	2.3	3.4	5.0	11	1.5	16	11	4.00E-04	5.80E-04
105	2.7	4.1	6.2	14	1.8	21	14	7.50E-04	1.00E-03
110	3.2	4.9	7.5	18	2.1	28	18	1.40E-03	1.80E-03
115	3.7	5.8	9.2	23	2.4	35	23	2.40E-03	3.10E-03
120	4.3	6.9	11	28	2.7	45	28	4.30E-03	5.30E-03
125	5	8.2	13	35	3.1	58	35	7.50E-03	9.00E-03
130	5.8	9.6	16	44	3.5	73	44	1.30E-02	1.50E-02
135	6.7	11	19	54	3.9	92	54	2.20E-02	2.40E-02
140	7.7	13	23	67	4.4	120	67	3.70E-02	3.90E-02
145	8.8	15	27	82	5.0	140	82	6.10E-02	6.30E-02
150	10	18	32	100	5.6	180	100	1.00E-01	1.00E-01
155	11	20	37	120	6.3	220	120	1.60E-01	1.60E-01
160	13	24	43	150	7.0	270	150	2.60E-01	2.40E-01
165	15	27	50	180	7.8	330	180	4.10E-01	3.70E-01
170	16	31	59	210	8.7	400	210	6.40E-01	5.70E-01
175	18	35	68	250	9.6	480	250	9.90E-01	8.50E-01

$$\pi_T = .1 \exp\left(\frac{-Ea}{8.617 \times 10^{-5}}\left(\frac{1}{T_J + 273} - \frac{1}{298}\right)\right) \text{ Silicon Devices}$$

$$\pi_T = .1 \exp\left(\frac{-Ea}{8.617 \times 10^{-5}}\left(\frac{1}{T_J + 273} - \frac{1}{423}\right)\right) \text{ GaAs Devices}$$

E_a = Effective Activation Energy (eV) (Shown Above)

T_J = Worse Case Junction Temperature (Silicon Devices) or Average Active Device Channel Temperature (GaAs Devices). See Section 5.11 (or Section 5.12 for Hybrids) for T_J Determination.

NOTES:

1. $T_J = T_C + P\theta_{JC}$
   - T_C = Case Temperature (°C)
   - P = Device Power Dissipation (W)
   - θ_{JC} = Junction to Case Thermal Resistance (°C/W)

   θ_{JC} should be obtained from the device manufacturer, MIL-M-38510, or from the default values shown in Section 5.11 for the closest equivalent device.
2. Use Digital MOS column for HC, HCT, AC, ACT, C and FCT technologies.
3. Table entries should be considered valid only up to the rated temperature of the component under consideration.

5.9 MICROCIRCUITS, C_2 TABLE FOR ALL

Package Failure Rate for all Microcircuits - C_2

Number of Functional Pins, N_p	Package Type: Hermetic: DIPs w/Solder or Weld Seal, Pin Grid Array (PGA)[1], SMT (Leaded and Nonleaded)	DIPs with Glass Seal[2]	Flatpacks with Axial Leads on 50 Mil Centers[3]	Cans[4]	Nonhermetic: DIPs, PGA, SMT (Leaded and Nonleaded)[5]
3	.00092	.00047	.00022	.00027	.0012
4	.0013	.00073	.00037	.00049	.0016
6	.0019	.0013	.00078	.0011	.0025
8	.0026	.0021	.0013	.0020	.0034
10	.0034	.0029	.0020	.0031	.0043
12	.0041	.0038	.0028	.0044	.0053
14	.0048	.0048	.0037	.0060	.0062
16	.0056	.0059	.0047	.0079	.0072
18	.0064	.0071	.0058		.0082
22	.0079	.0096	.0083		.010
24	.0087	.011	.0098		.011
28	.010	.014			.013
36	.013	.020			.017
40	.015	.024			.019
64	.025	.048			.032
80	.032				.041
128	.053				.068
180	.076				.098
224	.097				.12

1. $C_2 = 2.8 \times 10^{-4} (N_p)^{1.08}$
2. $C_2 = 9.0 \times 10^{-5} (N_p)^{1.51}$
3. $C_2 = 3.0 \times 10^{-5} (N_p)^{1.82}$
4. $C_2 = 3.0 \times 10^{-5} (N_p)^{2.01}$
5. $C_2 = 3.6 \times 10^{-4} (N_p)^{1.08}$

NOTES:

1. SMT: Surface Mount Technology
2. DIP: Dual In-Line Package
3. If DIP Seal type is unknown, assume glass
4. The package failure rate (C_2) accounts for failures associated only with the package itself. Failures associated with mounting the package to a circuit board are accounted for in Section 16, Interconnection Assemblies.

5.10 MICROCIRCUITS, π_E, λ_L AND π_Q TABLES FOR ALL

Environment Factor - π_E

Environment	π_E
G_B	.50
G_F	2.0
G_M	4.0
N_S	4.0
N_U	6.0
A_{IC}	4.0
A_{IF}	5.0
A_{UC}	5.0
A_{UF}	8.0
A_{RW}	8.0
S_F	.50
M_F	5.0
M_L	12
C_L	220

Learning Factor - π_L

Years in Production, Y	π_L
≤ .1	2.0
.5	1.8
1.0	1.5
1.5	1.2
≥ 2.0	1.0

$\pi_L = .01 \exp(5.35 - .35Y)$

Y = Years generic device type has been in production

Quality Factors - π_Q

Description	π_Q
Class S Categories: 1. Procured in full accordance with MIL-M-38510, Class S requirements. 2. Procured in full accordance with MIL-I-38535 and Appendix B thereto (Class U). 3. Hybrids: (Procured to Class S requirements (Quality Level K) of MIL-H-38534.	.25
Class B Categories: 1. Procured in full accordance with MIL-M-38510, Class B requirements. 2. Procured in full accordance with MIL-I-38535, (Class Q). 3. Hybrids: Procured to Class B requirements (Quality Level H) of MIL-H-38534.	1.0
Class B-1 Category: Fully compliant with all requirements of paragraph 1.2.1 of MIL-STD-883 and procured to a MIL drawing, DESC drawing or other government approved documentation. (Does not include hybrids). For hybrids use custom screening section below.	2.0

5.10 MICROCIRCUITS, π_E, π_L AND π_Q TABLES FOR ALL

Quality Factors (cont'd): π_Q Calculation for Custom Screening Programs

Group	MIL-STD-883 Screen/Test (Note 3)	Point Valuation
1*	TM 1010 (Temperature Cycle, Cond B Minimum) and TM 2001 (Constant Acceleration, Cond B Minimum) and TM 5004 (or 5008 for Hybrids) (Final Electricals @ Temp Extremes) and TM 1014 (Seal Test, Cond A, B, or C) and TM 2009 (External Visual)	50
2*	TM 1010 (Temperature Cycle, Cond B Minimum) or TM 2001 (Constant Acceleration, Cond B Minimum) TM 5004 (or 5008 for Hybrids) (Final Electricals @ Temp Extremes) and TM 1014 (Seal Test, Cond A, B, or C) and TM 2009 (External Visual)	37
3	Pre-Burn in Electricals TM 1015 (Burn-in B-Level/S-Level) and TM 5004 (or 5008 for Hybrids) (Post Burn-in Electricals @ Temp Extremes)	30 (B Level) 36 (S Level)
4*	TM 2020 Pind (Particle Impact Noise Detection)	11
5	TM 5004 (or 5008 for Hybrids) (Final Electricals @ Temperature Extremes)	11 (Note 1)
6	TM 2010/17 (Internal Visual)	7
7*	TM 1014 (Seal Test, Cond A, B, or C)	7 (Note 2)
8	TM 2012 (Radiography)	7
9	TM 2009 (External Visual)	7 (Note 2)
10	TM 5007/5013 (GaAs) (Wafer Acceptance)	1
11	TM 2023 (Non-Destructive Bond Pull)	1

$$\pi_Q = 2 + \frac{87}{\Sigma \text{ Point Valuations}}$$

*NOT APPROPRIATE FOR PLASTIC PARTS.

NOTES:
1. Point valuation only assigned if used independent of Groups 1, 2 or 3.
2. Point valuation only assigned if used independent of Groups 1 or 2.
3. Sequencing of tests within groups 1, 2 and 3 must be followed.
4. TM refers to the MIL-STD-883 Test Method.
5. Nonhermetic parts should be used only in controlled environments (i.e., G_B and other temperature/humidity controlled environments).

EXAMPLES:

1. Mfg. performs Group 1 test and Class B burn-in: $\pi_Q = 2 + \frac{87}{50+30} = 3.1$
2. Mfg. performs internal visual test, seal test and final electrical test: $\pi_Q = 2 + \frac{87}{7+7+11} = 5.5$

Other Commercial or Unknown Screening Levels	$\pi_Q = 10$

5.11 MICROCIRCUITS, T_J DETERMINATION, (ALL EXCEPT HYBRIDS)

Ideally, device case temperatures should be determined from a detailed thermal analysis of the equipment. Device junction temperature is then calculated with the following relationship:

$$T_J = T_C + \theta_{JC}P$$

T_J = Worst Case Junction Temperature (°C).

T_C = Case Temperature (°C). If not available, use the following default table.

Default Case Temperature (T_C) for all Environments

Environment	G_B	G_F	G_M	N_S	N_U	A_{IC}	A_{IF}	A_{UC}	A_{UF}	A_{RW}	S_F	M_F	M_L	C_L
T_C (°C)	35	45	50	45	50	60	60	75	75	60	35	50	60	45

θ_{JC} = Junction-to-case thermal resistance (°C/watt) for a device soldered into a printed circuit board. If θ_{JC} is not available, use a value contained in a specification for the closest equivalent device or use the following table.

Package Type (Ceramic Only)	Die Area > 14,400 mil^2 θ_{JC} (°C/W)	Die Area ≤ 14,400 mil^2 θ_{JC} (°C/W)
Dual-In-Line	11	28
Flat Package	10	22
Chip Carrier	10	20
Pin Grid Array	10	20
Can	–	70

P = The maximum power dissipation realized in a system application. If the applied power is not available, use the maximum power dissipation from the specification for the closest equivalent device.

5.12 MICROCIRCUITS, T_J DETERMINATION, (FOR HYBRIDS)

This section describes a method for estimating junction temperature (T_J) for integrated circuit dice mounted in a hybrid package. A hybrid is normally made up of one or more substrate assemblies mounted within a sealed package. Each substrate assembly consists of active and passive chips with thick or thin film metallization mounted on the substrate, which in turn may have multiple layers of metallization and dielectric on the surface. Figure 5-1 is a cross-sectional view of a hybrid with a single multi-layered substrate. The layers within the hybrid are made up of various materials with different thermal characteristics. The table following Figure 5-1 provides a list of commonly used hybrid materials with typical thicknesses and corresponding thermal conductivities (K). If the hybrid internal structure cannot be determined, use the following default values for the temperature rise from case to junction: microcircuits, 10°C; transistors, 25°C; diodes, 20°C. Assume capacitors are at T_C.

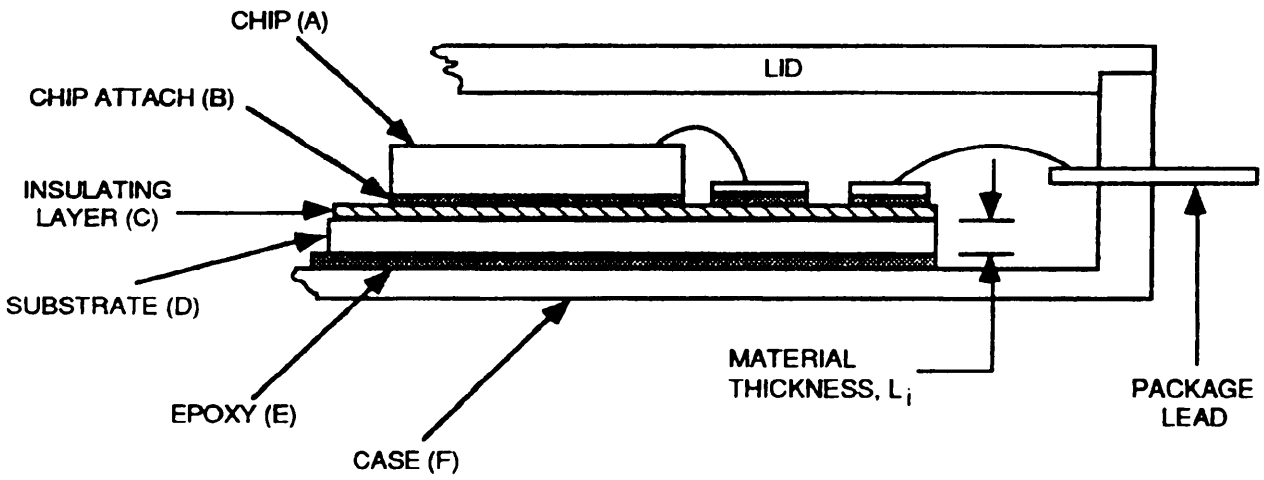

Figure 5-1: Cross-sectional View of a Hybrid with a Single Multi-Layered Substrate

5.12 MICROCIRCUITS, T_J DETERMINATION, (FOR HYBRIDS)

Typical Hybrid Characteristics

Material	Typical Usage	Typical Thickness, L_i (in.)	Feature From Figure 5-1	Thermal Conductivity, K_i $\left(\frac{W/in^2}{°C/in}\right)$	$\left(\frac{1}{K_i}\right)(L_i)$ $(in^2\ °C/W)$
Silicon	Chip Device	0.010	A	2.20	.0045
GaAs	Chip Device	0.0070	A	.76	.0092
Au Eutectic	Chip Attach	0.0001	B	6.9	.000014
Solder	Chip/Substrate Attach	0.0030	B/E	1.3	.0023
Epoxy (Dielectric)	Chip/Substrate Attach	0.0035	B/E	.0060	.58
Epoxy (Conductive)	Chip Attach	0.0035	B	.15	.023
Thick Film Dielectric	Glass Insulating Layer	0.0030	C	.66	.0045
Alumina	Substrate, MHP	0.025	D	.64	.039
Beryllium Oxide	Substrate, PHP	0.025	D	6.6	.0038
Kovar	Case, MHP	0.020	F	.42	.048
Aluminum	Case, MHP	0.020	F	4.6	.0043
Copper	Case, PHP	0.020	F	9.9	.0020

NOTE: MHP: Multichip Hybrid Package, PHP: Power Hybrid Package (Pwr: ≥ 2W, Typically)

$$\theta_{JC} = \frac{\sum_{i=1}^{n} \left(\frac{1}{K_i}\right)(L_i)}{A}$$

n = Number of Material Layers

K_i = Thermal Conductivity of ith Material $\left(\frac{W/in^2}{°C/in}\right)$ (User Provided or From Table)

L_i = Thickness of ith Material (in) (User Provided or From Table)

A = Die Area (in^2). If Die Area cannot be readily determined, estimate as follows:
$A = [\ .00278\ (\text{No. of Die Active Wire Terminals}) + .0417]^2$

Estimate T_J as Follows:

$$T_J = T_C + .9\ (\theta_{JC})\ (P_D)$$

T_C = Hybrid Case Temperature (°C). If unknown, use the T_C Default Table shown in Section 5.11.

θ_{JC} = Junction-to-Case Thermal Resistance (°C/W) (As determined above)

P_D = Die Power Dissipation (W)

5.13 MICROCIRCUITS, EXAMPLES

Example 1: CMOS Digital Gate Array

Given: A CMOS digital timing chip (4046) in an airborne inhabited cargo application, case temperature 48°C, 75mW power dissipation. The device is procured with normal manufacturer's screening consisting of temperature cycling, constant acceleration, electrical testing, seal test and external visual inspection, in the sequence given. The component manufacturer also performs a B-level burn-in followed by electrical testing. All screens and tests are performed to the applicable MIL-STD-883 screening method. The package is a 24 pin ceramic DIP with a glass seal. The device has been manufactured for several years and has 1000 transistors.

$$\lambda_p = (C_1\pi_T + C_2\pi_E)\,\pi_Q\pi_L \qquad \text{Section 5.1}$$

C_1	=	.020	1000 Transistors ≈ 250 Gates, MOS C_1 Table, Digital Column
π_T	=	.29	Determine T_J from Section 5.11 T_J = 48°C + (28°C/W)(.075W) = 50°C Determine π_T from Section 5.8, Digital MOS Column.
C_2	=	.011	Section 5.9
π_E	=	4.0	Section 5.10
π_Q	=	3.1	Section 5.10

Group 1 Tests	50 Points
Group 3 Tests (B-level)	30 Points
TOTAL	80 Points

$$\pi_Q = 2 + \frac{87}{80} = 3.1$$

π_L	=	1	Section 5.10

$$\lambda_p = [\,(.020)(.29) + (.011)\,(4)\,]\,(3.1)(1) = .15 \text{ Failure}/10^6 \text{ Hours}$$

Example 2: EEPROM

Given: A 128K Flotox EEPROM that is expected to have a T_J of 80°C and experience 10,000 read/write cycles over the life of the system. The part is procured to all requirements of Paragraph 1.2.1, MIL-STD-883, Class B screening level requirements and has been in production for three years. It is packaged in a 28 pin DIP with a glass seal and will be used in an airborne uninhabited cargo application.

$$\pi_p = (C_1\,\pi_T + C_2\,\pi_E + \lambda_{cyc})\,\pi_Q\,\pi_L \qquad \text{Section 5.2}$$

C_1	=	.0034	Section 5.2
π_T	=	3.8	Section 5.8
C_2	=	.014	Section 5.9

π_E = 5.0		Section 5.10
π_Q = 2.0		Section 5.10
π_L = 1.0		Section 5.10
λ_{cyc} = .38		Section 5.2:

$$\lambda_{cyc} = \left[A_1 B_1 + \frac{A_2 B_2}{\pi_Q} \right] \pi_{ECC}$$

$A_2 = B_2 = 0$ for Flotox

Assume No ECC, $\pi_{ECC} = 1$

$A_1 = .1$, $7K \leq C \leq 15K$ Entry

$B_1 = 3.8$ (Use Equation 1 at bottom of B_1 and B_2 Table)

$\lambda_{cyc} = A_1 B_1 = (.1)(3.8) = .38$

$$\lambda_p = [\,(.0034)(3.8) + (.014)(5.0) + .38]\,(2.0)(1) = .93 \text{ Failures}/10^6 \text{ Hours}$$

Example 3: GaAs MMIC

Given: A MA4GM212 Single Pole Double Throw Switch, DC - 12 GHz, 4 transistors, 4 inductors, 8 resistors, maximum input P_D = 30 dbm, 16 pin hermetic flatpack, maximum T_{CH} = 145°C in a ground benign environment. The part has been manufactured for 1 year and is screened to Paragraph 1.2.1 of MIL-STD-883, Class B equivalent screen.

$$\lambda_p = [\, C_1 \pi_T \pi_A + C_2 \pi_E \,]\, \pi_L \pi_Q \qquad \text{Section 5.4}$$

C_1 = 4.5		Section 5.4, MMIC Table, 4 Active Elements (See Footnote to Table)
π_T = .061		Section 5.8, $T_J = T_{CH}$ = 145°C
π_A = 3.0		Section 5.4, Unknown Application
C_2 = .0047		Section 5.9
π_E = .50		Section 5.10
π_L = 1.5		Section 5.10
π_Q = 2.0		Section 5.10

$$\lambda_p = \left[(4.5)(.061)(3.0) + (.0047)(.5)\right](1.5)(2.0) = 2.5 \text{ Failures}/10^6 \text{ Hours}$$

NOTE: The passive elements are assumed to contribute negligibly to the overall device failure rate.

Example 4: Hybrid

Given: A linear multichip hybrid driver in a hermetically sealed Kovar package. The substrate is alumina and there are two thick film dielectric layers. The die and substrate attach materials are conductive epoxy and solder, respectively. The application environment is naval unsheltered, 65°C case temperature and the device has been in production for over two years. The device is

5.13 MICROCIRCUITS, EXAMPLES

screened to MIL-STD-883, Method 5008, in accordance with Table VIII, Class B requirements. The hybrid contains the following components:

Active Components:	1	-	LM106 Bipolar Comparator/Buffer Die (13 Transistors)
	1	-	LM741A Bipolar Operational Amplifier Die (24 Transistors)
	2	-	Si NPN Transistor
	2	-	Si PNP Transistor
	2	-	Si General Purpose Diodes
Passive Components:	2	-	Ceramic Chip Capacitors
	17	-	Thick Film Resistors

$$\lambda_p = [\Sigma N_C \lambda_c](1 + .2\pi_E)\pi_F \pi_Q \pi_L \qquad \text{Section 5.5}$$

1. Estimate Active Device Junction Temperatures

If limited information is available on the specific hybrid materials and construction characteristics the default case-to-junction temperature rises shown in the introduction to Section 5.12 can be used. When detailed information becomes available the following Section 5.12 procedure should be used to determine the junction-to-case (θ_{JC}) thermal resistance and T_J values for each component.

$$\theta_{JC} = \frac{\sum_{i=1}^{n}\left(\frac{1}{K_i}\right)(L_i)}{A} \qquad \text{(Equation 1)}$$

Layer	Figure 5-1 Feature		$\left(\frac{1}{K_i}\right)(L_i)$ $(in^2\ °C/W)$
Silicon Chip	A		.0045
Conductive Epoxy	B		.023
Two Dielectric Layers	C	(2)(.0045) =	.009
Alumina Substrate	D		.039
Solder Substrate Attachment	E		.0023
Kovar Case	F		.048
		$\Sigma\left(\frac{1}{K_i}\right)(L_i) =$	.1258

$$A = \text{Die Area} = [\,.00278\ (\text{No. Die Active Wire Terminals}) + .0417]^2 \qquad \text{(Equation 2)}$$

$$T_J = T_C + \theta_{JC} P_D \qquad \text{(Equation 3)}$$

	LM106	LM741A	Si NPN	Si PNP	Si Diode	Source
No. of Pins	8	14	3	3	2	Vendor Spec. Sheet
Power Dissipation, P_D (W)	.33	.35	.6	.6	.42	Circuit Analysis
Area of Chip (in.^{2})	.0041	.0065	.0025	.0025	.0022	Equ. 2 Above
θ_{JC} (°C/W)	30.8	19.4	50.3	50.3	56.3	Equ. 1 Above
T_J (°C)	75	72	95	95	89	Equ. 3 Above

2. Calculate Failure Rates for Each Component:

A) LM106 Die, 13 Transistors (from Vendor Spec. Sheet)

$\lambda_p = [\, C_1 \pi_T + C_2 \pi_E \,] \pi_Q \pi_L$ Section 5.1

Because $C_2 = 0$;

$\lambda_p = C_1 \pi_T \pi_Q \pi_L$ π_T: Section 5.8; π_Q, π_L Default to 1.0

$= (.01)(3.8)(1)(1) = .038$ Failures/10^6 Hours

B) LM741 Die, 23 Transistors. Use Same Procedure as Above.

$\lambda_p = C_1 \pi_T \pi_Q \pi_L = (.01)(3.1)(1)(1) = .031$ Failures/10^6 Hours

C) Silicon NPN Transistor, Rated Power = 5W (From Vendor Spec. Sheet), $V_{CE}/V_{CEO} = .6$, Linear Application

$\lambda_p = \lambda_b \pi_T \pi_A \pi_R \pi_S \pi_Q \pi_E$ Section 6.3; π_Q, π_E Default to 1.0

$= (.00074)(3.9)(1.5)(1.8)(.29)(1)(1)$

$= .0023$ Failures/10^6 Hours

D) Silicon PNP Transistor, Same as C.

$\lambda_p = .0023$ Failures/10^6 Hours

E) Silicon General Purpose Diode (Analog), Voltage Stress = 60%, Metallurgically Bonded Construction.

$\lambda_p = \lambda_b \pi_T \pi_S \pi_C \pi_Q \pi_E$ Section 6.1; π_Q, π_E Default to 1.0

$= (.0038)(6.3)(.29)(1)(1)(1)$

$= .0069$ Failures/10^6 Hours

5.13 MICROCIRCUITS, EXAMPLES

F) Ceramic Chip Capacitor, Voltage Stress = 50%,
$T_A = T_{CASE}$ for the Hybrid, 1340 pF, 125°C Rated Temp.

$$\lambda_p = \lambda_b \pi_{CV} \pi_Q \pi_E$$ Section 10.11; π_Q, π_E Default to 1.0

$$= (.0028)(1.4)(1)(1)$$

$$= .0039 \text{ Failures}/10^6 \text{ Hours}$$

G) Thick Film Resistors, per instructions in Section 5.5, the contribution of these devices is considered insignificant relative to the overall hybrid failure rate and they may be ignored.

Overall Hybrid Part Failure Rate Calculation:

$$\lambda_p = [\Sigma N_C \lambda_c](1 + .2\pi_E)\pi_F \pi_Q \pi_L$$

π_E	=	6.0	Section 5.10
π_F	=	5.8	Section 5.5
π_Q	=	1	Section 5.10
π_L	=	1	Section 5.10

$$\lambda_p = [(1)(.038) + (1)(.031) + (2)(.0023) + (2)(.0023) + (2)(.0069) + (2)(.0039)](1 + .2(6.0))(5.8)(1)(1)$$

$$\lambda_p = 1.3 \text{ Failures}/10^6 \text{ Hours}$$

6.0 DISCRETE SEMICONDUCTORS, INTRODUCTION

The semiconductor transistor, diode and opto-electronic device sections present the failure rates on the basis of device type and construction. An analytical model of the failure rate is also presented for each device category. The various types of discrete semiconductor devices require different failure rate models that vary to some degree. The models apply to single devices unless otherwise noted. For multiple devices in a single package the hybrid model in Section 5.5 should be used.

The applicable MIL specification for transistors, and optoelectronic devices is MIL-S-19500. The quality levels (JAN, JANTX, JANTXV) are as defined in MIL-S-19500.

The temperature factor (π_T) is based on the device junction temperature. Junction temperature should be computed based on worse case power (or maximum power dissipation) and the device junction to case thermal resistance. Determination of junction temperatures is explained in Section 6.14.

Reference 28 should be consulted for further detailed information on the models appearing in this section.

6.1 DIODES, LOW FREQUENCY

SPECIFICATION
MIL-S-19500

DESCRIPTION
Low Frequency Diodes: General Purpose Analog, Switching, Fast Recovery, Power Rectifier, Transient Suppressor, Current Regulator, Voltage Regulator, Voltage Reference

$$\lambda_p = \lambda_b \pi_T \pi_S \pi_C \pi_Q \pi_E \quad \text{Failures}/10^6 \text{ Hours}$$

Base Failure Rate - λ_b

Diode Type/Application	λ_b
General Purpose Analog	.0038
Switching	.0010
Power Rectifier, Fast Recovery	.069
Power Rectifier/Schottky Power Diode	.0030
Power Rectifier with High Voltage Stacks	.0050/ Junction
Transient Suppressor/Varistor	.0013
Current Regulator	.0034
Voltage Regulator and Voltage Reference (Avalanche and Zener)	.0020

Temperature Factor - π_T
(General Purpose Analog, Switching, Fast Recovery, Power Rectifier, Transient Suppressor)

T_J (°C)	π_T	T_J (°C)	π_T
25	1.0	105	9.0
30	1.2	110	10
35	1.4	115	11
40	1.6	120	12
45	1.9	125	14
50	2.2	130	15
55	2.6	135	16
60	3.0	140	18
65	3.4	145	20
70	3.9	150	21
75	4.4	155	23
80	5.0	160	25
85	5.7	165	28
90	6.4	170	30
95	7.2	175	32
100	8.0		

$$\pi_T = \exp\left(-3091\left(\frac{1}{T_J + 273} - \frac{1}{298}\right)\right)$$

T_J = Junction Temperature (°C)

Temperature Factor - π_T
(Voltage Regulator, Voltage Reference, and Current Regulator)

T_J (°C)	π_T	T_J (°C)	π_T
25	1.0	105	3.9
30	1.1	110	4.2
35	1.2	115	4.5
40	1.4	120	4.8
45	1.5	125	5.1
50	1.6	130	5.4
55	1.8	135	5.7
60	2.0	140	6.0
65	2.1	145	6.4
70	2.3	150	6.7
75	2.5	155	7.1
80	2.7	160	7.5
85	3.0	165	7.9
90	3.2	170	8.3
95	3.4	175	8.7
100	3.7		

$$\pi_T = \exp\left(-1925\left(\frac{1}{T_J + 273} - \frac{1}{298}\right)\right)$$

T_J = Junction Temperature (°C)

Electrical Stress Factor - π_S

Stress	π_S
Transient Suppressor, Voltage Regulator, Voltage Reference, Current Regulator	1.0
All Others:	
$V_S \leq .30$	0.054
$.3 < V_S \leq .40$	0.11
$.4 < V_S \leq .50$	0.19
$.5 < V_S \leq .60$	0.29
$.6 < V_S \leq .70$	0.42
$.7 < V_S \leq .80$	0.58
$.8 < V_S \leq .90$	0.77
$.9 < V_S \leq 1.00$	1.0

For All Except Transient Suppressor, Voltage Regulator, Voltage Reference, or Current Regulator

$\pi_S = .054 \qquad (V_S \leq .3)$

$\pi_S = V_S^{2.43} \qquad (.3 < V_S \leq 1)$

V_S = Voltage Stress Ratio = $\frac{\text{Voltage Applied}}{\text{Voltage Rated}}$

Voltage is Diode Reverse Voltage

Contact Construction Factor - π_C

Contact Construction	π_C
Metallurgically Bonded	1.0
Non-Metallurgically Bonded and Spring Loaded Contacts	2.0

Quality Factor - π_Q

Quality	π_Q
JANTXV	0.7
JANTX	1.0
JAN	2.4
Lower	5.5
Plastic	8.0

Environment Factor - π_E

Environment	π_E
G_B	1.0
G_F	6.0
G_M	9.0
N_S	9.0
N_U	19
A_{IC}	13
A_{IF}	29
A_{UC}	20
A_{UF}	43
A_{RW}	24
S_F	.50
M_F	14
M_L	32
C_L	320

6.2 DIODES, HIGH FREQUENCY (MICROWAVE, RF)

SPECIFICATION
MIL-S-19500

DESCRIPTION
Si IMPATT; Bulk Effect, Gunn; Tunnel, Back; Mixer, Detector, PIN, Schottky; Varactor, Step Recovery

$$\lambda_p = \lambda_b \pi_T \pi_A \pi_R \pi_Q \pi_E \quad \text{Failures}/10^6 \text{ Hours}$$

Base Failure Rate - λ_b

Diode Type	λ_b
Si IMPATT (≤ 35 GHz)	.22
Gunn/Bulk Effect	.18
Tunnel and Back (Including Mixers, Detectors)	.0023
PIN	.0081
Schottky Barrier (Including Detectors) and Point Contact (200 MHz ≤ Frequency ≤ 35 GHz)	.027
Varactor and Step Recovery	.0025

Temperature Factor - π_T
(All Types Except IMPATT)

T_J (°C)	π_T	T_J (°C)	π_T
25	1.0	105	4.4
30	1.1	110	4.8
35	1.3	115	5.1
40	1.4	120	5.5
45	1.6	125	5.9
50	1.7	130	6.3
55	1.9	135	6.7
60	2.1	140	7.1
65	2.3	145	7.6
70	2.5	150	8.0
75	2.8	155	8.5
80	3.0	160	9.0
85	3.3	165	9.5
90	3.5	170	10
95	3.8	175	11
100	4.1		

$$\pi_T = \exp\left(-2100\left(\frac{1}{T_J + 273} - \frac{1}{298}\right)\right)$$

T_J = Junction Temperature (°C)

Temperature Factor- π_T
(IMPATT)

T_J (°C)	π_T	T_J (°C)	π_T
25	1.0	105	42
30	1.3	110	50
35	1.8	115	60
40	2.3	120	71
45	3.0	125	84
50	3.9	130	99
55	5.0	135	120
60	6.4	140	140
65	8.1	145	160
70	10	150	180
75	13	155	210
80	16	160	250
85	19	165	280
90	24	170	320
95	29	175	370
100	35		

$$\pi_T = \exp\left(-5260\left(\frac{1}{T_J + 273} - \frac{1}{298}\right)\right)$$

T_J = Junction Temperature (°C)

Application Factor - π_A

Diodes Application	π_A
Varactor, Voltage Control	.50
Varactor, Multiplier	2.5
All Other Diodes	1.0

Power Rating Factor - π_R

Rated Power, P_r (Watts)	π_R
PIN Diodes	
$P_r \leq 10$	.50
$10 < P_r \leq 100$	1.3
$100 < P_r \leq 1000$	2.0
$1000 < P_r \leq 3000$	2.4
All Other Diodes	1.0

PIN Diodes $\pi_R = .326 \ln(P_r) - .25$

All Other Diodes $\pi_R = 1.0$

Quality Factor - π_Q
(Schottky)

Quality*	π_Q
JANTXV	.50
JANTX	1.0
JAN	1.8
Lower	2.5
Plastic	—

* For high frequency part classes not specified to MIL-S-19500 equipment quality classes are defined as devices meeting the same requirements as MIL-S-19500.

Quality Factor - π_Q
(All Types Except Schottky)

Quality*	π_Q
JANTXV	.50
JANTX	1.0
JAN	5.0
Lower	25
Plastic	50

* For high frequency part classes not specified to MIL-S-19500 equipment quality classes are defined as devices meeting the same requirements as MIL-S-19500.

Environment Factor - π_E

Environment	π_E
G_B	1.0
G_F	2.0
G_M	5.0
N_S	4.0
N_U	11
A_{IC}	4.0
A_{IF}	5.0
A_{UC}	7.0
A_{UF}	12
A_{RW}	16
S_F	.50
M_F	9.0
M_L	24
C_L	250

6.3 TRANSISTORS, LOW FREQUENCY, BIPOLAR

SPECIFICATION
MIL-S-19500

DESCRIPTION
NPN (Frequency < 200 MHz)
PNP (Frequency < 200 MHz)

$$\lambda_p = \lambda_b \pi_T \pi_A \pi_R \pi_S \pi_Q \pi_E \quad \text{Failures}/10^6 \text{ Hours}$$

Base Failure Rate - λ_b

Type	λ_b
NPN and PNP	.00074

Application Factor - π_A

Application	π_A
Linear Amplification	1.5
Switching	.70

Temperature Factor - π_T

T_J (°C)	π_T	T_J (°C)	π_T
25	1.0	105	4.5
30	1.1	110	4.8
35	1.3	115	5.2
40	1.4	120	5.6
45	1.6	125	5.9
50	1.7	130	6.3
55	1.9	135	6.8
60	2.1	140	7.2
65	2.3	145	7.7
70	2.5	150	8.1
75	2.8	155	8.6
80	3.0	160	9.1
85	3.3	165	9.7
90	3.6	170	10
95	3.9	175	11
100	4.2		

$$\pi_T = \exp\left(-2114\left(\frac{1}{T_J + 273} - \frac{1}{298}\right)\right)$$

T_J = Junction Temperature (°C)

Power Rating Factor - π_R

Rated Power (P_r, Watts)	π_R
$P_r \leq .1$	.43
$P_r = .5$	.77
$P_r = 1.0$	1.0
$P_r = 5.0$	1.8
$P_r = 10.0$	2.3
$P_r = 50.0$	4.3
$P_r = 100.0$	5.5
$P_r = 500.0$	10

$\pi_R = .43$ Rated Power ≤ .1W

$\pi_R = (P_r)^{.37}$ Rated Power > .1W

Voltage Stress Factor - π_S

Applied V_{CE}/Rated V_{CEO}	π_S
$0 < V_S \leq .3$	.11
$.3 < V_S \leq .4$	.16
$.4 < V_S \leq .5$	.21
$.5 < V_S \leq .6$	.29
$.6 < V_S \leq .7$	.39
$.7 < V_S \leq .8$	.54
$.8 < V_S \leq .9$	.73
$.9 < V_S \leq 1.0$	1.0

π_S = .045 exp (3.1(Vs)) $(0 < V_S \leq 1.0)$

V_s = Applied V_{CE} / Rated V_{CEO}

V_{CE} = Voltage, Collector to Emitter

V_{CEO} = Voltage, Collector to Emitter, Base Open

Environment Factor - π_E

Environment	π_E
G_B	1.0
G_F	6.0
G_M	9.0
N_S	9.0
N_U	19
A_{IC}	13
A_{IF}	29
A_{UC}	20
A_{UF}	43
A_{RW}	24
S_F	.50
M_F	14
M_L	32
C_L	320

Quality Factor - π_Q

Quality	π_Q
JANTXV	.70
JANTX	1.0
JAN	2.4
Lower	5.5
Plastic	8.0

6.4 TRANSISTORS, LOW FREQUENCY, SI FET

SPECIFICATION
MIL-S-19500

DESCRIPTION
N-Channel and P-Channel Si FET (Frequency ≤ 400 MHz)

$$\lambda_p = \lambda_b \pi_T \pi_A \pi_Q \pi_E \text{ Failures}/10^6 \text{ Hours}$$

Base Failure Rate - λ_b

Transistor Type	λ_b
MOSFET	.012
JFET	.0045

Temperature Factor - π_T

T_J (°C)	π_T	T_J (°C)	π_T
25	1.0	105	3.9
30	1.1	110	4.2
35	1.2	115	4.5
40	1.4	120	4.8
45	1.5	125	5.1
50	1.6	130	5.4
55	1.8	135	5.7
60	2.0	140	6.0
65	2.1	145	6.4
70	2.3	150	6.7
75	2.5	155	7.1
80	2.7	160	7.5
85	3.0	165	7.9
90	3.2	170	8.3
95	3.4	175	8.7
100	3.7		

$$\pi_T = \exp\left(-1925\left(\frac{1}{T_J + 273} - \frac{1}{298}\right)\right)$$

T_J = Junction Temperature (°C)

Quality Factor - π_Q

Quality	π_Q
JANTXV	.70
JANTX	1.0
JAN	2.4
Lower	5.5
Plastic	8.0

Application Factor - π_A

Application (P_r, Rated Output Power)	π_A
Linear Amplification (P_r < 2W)	1.5
Small Signal Switching	.70
Power FETs (Non-linear, P_r ≥ 2W)	
2 ≤ P_r < 5W	2.0
5 ≤ P_r < 50W	4.0
50 ≤ P_r < 250W	8.0
P_r ≥ 250W	10

Environment Factor - π_E

Environment	π_E
G_B	1.0
G_F	6.0
G_M	9.0
N_S	9.0
N_U	19
A_{IC}	13
A_{IF}	29
A_{UC}	20
A_{UF}	43
A_{RW}	24
S_F	.50
M_F	14
M_L	32
C_L	320

SPECIFICATION
MIL-S-19500

DESCRIPTION
Unijunction Transistors

$$\lambda_p = \lambda_b \pi_T \pi_Q \pi_E \quad \text{Failures}/10^6 \text{ Hours}$$

Base Failure Rate - λ_b

Type	λ_b
All Unijunction	.0083

Temperature Factor - π_T

T_J (°C)	π_T	T_J (°C)	π_T
25	1.0	105	5.8
30	1.1	110	6.4
35	1.3	115	6.9
40	1.5	120	7.5
45	1.7	125	8.1
50	1.9	130	8.8
55	2.1	135	9.5
60	2.4	140	10
65	2.7	145	11
70	3.0	150	12
75	3.3	155	13
80	3.7	160	13
85	4.0	165	14
90	4.4	170	15
95	4.9	175	16
100	5.3		

$$\pi_T = \exp\left(-2483\left(\frac{1}{T_J + 273} - \frac{1}{298}\right)\right)$$

T_J = Junction Temperature (°C)

Quality Factor - π_Q

Quality	π_Q
JANTXV	.70
JANTX	1.0
JAN	2.4
Lower	5.5
Plastic	8.0

Environment Factor - π_E

Environment	π_E
G_B	1.0
G_F	6.0
G_M	9.0
N_S	9.0
N_U	19
A_{IC}	13
A_{IF}	29
A_{UC}	20
A_{UF}	43
A_{RW}	24
S_F	.50
M_F	14
M_L	32
C_L	320

6.6 TRANSISTORS, LOW NOISE, HIGH FREQUENCY, BIPOLAR

SPECIFICATION
MIL-S-19500

DESCRIPTION
Bipolar, Microwave RF Transistor
(Frequency > 200 MHz, Power < 1W)

$$\lambda_p = \lambda_b \pi_T \pi_R \pi_S \pi_Q \pi_E \quad \text{Failures}/10^6 \text{ Hours}$$

Application Note: The model applies to a single die (for multiple die use the hybrid model). The model does apply to ganged transistors on a single die.

Base Failure Rate - λ_b

Type	λ_b
All Types	.18

Temperature Factor - π_T

T_J (°C)	π_T	T_J (°C)	π_T
25	1.0	105	4.5
30	1.1	110	4.8
35	1.3	115	5.2
40	1.4	120	5.6
45	1.6	125	5.9
50	1.7	130	6.3
55	1.9	135	6.8
60	2.1	140	7.2
65	2.3	145	7.7
70	2.5	150	8.1
75	2.8	155	8.6
80	3.0	160	9.1
85	3.3	165	9.7
90	3.6	170	10
95	3.9	175	11
100	4.2		

$$\pi_T = \exp\left(-2114\left(\frac{1}{T_J + 273} - \frac{1}{298}\right)\right)$$

T_J = Junction Temperature (°C)

Power Rating Factor - π_R

Rated Power (P_r, Watts)	π_R
$P_r \le .1$	.43
$.1 < P_r \le .2$	.55
$.2 < P_r \le .3$	.64
$.3 < P_r \le .4$	.71
$.4 < P_r \le .5$	.77
$.5 < P_r \le .6$	.83
$.6 < P_r \le .7$	.88
$.7 < P_r \le .8$	.92
$.8 < P_r \le .9$	.96

$\pi_R = .43$ $\quad P_r \le .1W$

$\pi_R = (P_r)^{.37}$ $\quad P_r > .1W$

Voltage Stress Factor - π_S

Applied V_{CE}/Rated V_{CEO}	π_S
$0 < V_s \le .3$	.11
$.3 < V_s \le .4$	.16
$.4 < V_s \le .5$	.21
$.5 < V_s \le .6$	.29
$.6 < V_s \le .7$	.39
$.7 < V_s \le .8$	.54
$.8 < V_s \le .9$	.73
$.9 < V_s \le 1.0$	1.0

$\pi_S = .045 \exp(3.1(V_s)) \quad (0 < V_s \le 1.0)$

V_s = Applied V_{CE} / Rated V_{CEO}

V_{CE} = Voltage, Collector to Emitter

V_{CEO} = Voltage, Collector to Emitter, Base Open

6.6 TRANSISTORS, LOW NOISE, HIGH FREQUENCY, BIPOLAR

Quality Factor - π_Q

Quality	π_Q
JANTXV	.50
JANTX	1.0
JAN	2.0
Lower	5.0

NOTE: For these devices, JANTXV quality class must include IR Scan for die attach and screen for barrier layer pinholes on gold metallized devices.

Environment Factor - π_E

Environment	π_E
G_B	1.0
G_F	2.0
G_M	5.0
N_S	4.0
N_U	11
A_{IC}	4.0
A_{IF}	5.0
A_{UC}	7.0
A_{UF}	12
A_{RW}	16
S_F	.50
M_F	9.0
M_L	24
C_L	250

6.7 TRANSISTORS, HIGH POWER, HIGH FREQUENCY, BIPOLAR

SPECIFICATION
MIL-S-19500

DESCRIPTION
Power, Microwave, RF Bipolar Transistors
(Average Power ≥ 1W)

$$\lambda_p = \lambda_b \pi_T \pi_A \pi_M \pi_Q \pi_E \quad \text{Failures}/10^6 \text{ Hours}$$

Base Failure Rate - λ_b

Frequency (GHz)	Output Power (Watts) 1.0	5.0	10	50	100	200	300	400	500	600
≤ 0.5	.038	.039	.040	.050	.067	.12	.20	.36	.62	1.1
1	.046	.047	.048	.060	.080	.14	.24	.42	.74	1.3
2	.065	.067	.069	.086	.11	.20	.35			
3	.093	.095	.098	.12	.16	.28				
4	.13	.14	.14	.17	.23					
5	.19	.19	.20	.25						

λ_b = .032 exp(.354(F) + .00558(P)) F = Frequency (GHz) P = Output Power (W)

NOTE: Output power refers to the power level for the overall packaged device and not to individual transistors within the package (if more than one transistor is ganged together). The output power represents the power output from the active device and should not account for any duty cycle in pulsed applications. Duty cycle is accounted for when determining π_A.

Temperature Factor - π_T
(Gold Metallization)

T_J (°C)	V_s (V_{CE}/BV_{CES}) ≤ .40	.45	.50	.55
≤100	.10	.20	.30	.40
110	.12	.25	.37	.49
120	.15	.30	.45	.59
130	.18	.36	.54	.71
140	.21	.43	.64	.85
150	.25	.50	.75	1.0
160	.29	.59	.88	1.2
170	.34	.68	1.0	1.4
180	.40	.79	1.2	1.6
190	.45	.91	1.4	1.8
200	.52	1.0	1.6	2.1

$$\pi_T = .1 \exp\left(-2903\left(\frac{1}{T_J + 273} - \frac{1}{373}\right)\right), \quad (V_s \le .40)$$

$$\pi_T = 2(V_s - .35) \exp\left(-2903\left(\frac{1}{T_J + 273} - \frac{1}{373}\right)\right), \quad (.4 < V_s \le .55)$$

V_s = V_{CE} / BV_{CES}
V_{CE} = Operating Voltage (Volts)
BV_{CES} = Collector-Emitter Breakdown Voltage with Base Shorted to Emitter (Volts)
T_J = Peak Junction Temperature (°C)

Temperature Factor - π_T
(Aluminum Metallization)

T_J (°C)	V_s (V_{CE}/BV_{CES}) ≤ .40	.45	.50	.55
≤100	.38	.75	1.1	1.5
110	.57	1.1	1.7	2.3
120	.84	1.7	2.5	3.3
130	1.2	2.4	3.6	4.8
140	1.7	3.4	5.1	6.8
150	2.4	4.7	7.1	9.5
160	3.3	6.5	9.7	13
170	4.4	8.8	13	18
180	5.9	12	18	23
190	7.8	15	23	31
200	10	20	30	40

$$\pi_T = .38 \exp\left(-5794\left(\frac{1}{T_J + 273} - \frac{1}{373}\right)\right), \quad (V_s \le .40)$$

$$\pi_T = 7.55(V_s - .35) \exp\left(-5794\left(\frac{1}{T_J + 273} - \frac{1}{373}\right)\right), \quad (.4 < V_s \le .55)$$

V_s = V_{CE} / BV_{CES}
V_{CE} = Operating Voltage (Volts)
BV_{CES} = Collector-Emitter Breakdown Voltage with Base Shorted to Emitter (Volts)
T_J = Peak Junction Temperature (°C)

6.7 TRANSISTORS, HIGH POWER, HIGH FREQUENCY, BIPOLAR

Application Factor - π_A

Application	Duty Factor	π_A
CW	N/A	7.6
Pulsed	≤ 1%	.46
	5%	.70
	10%	1.0
	15%	1.3
	20%	1.6
	25%	1.9
	≥ 30%	2.2

π_A = 7.6, CW

π_A = .06 (Duty Factor %) + .40 , Pulsed

Quality Factor - π_Q

Quality	π_Q
JANTXV	.50
JANTX	1.0
JAN	2.0
Lower	5.0

NOTE: For these devices, JANTXV quality class must include IR Scan for die attach and screen for barrier layer pinholes on gold metallized devices.

Matching Network Factor - π_M

Matching	π_M
Input and Output	1.0
Input	2.0
None	4.0

Environment Factor - π_E

Environment	π_E
G_B	1.0
G_F	2.0
G_M	5.0
N_S	4.0
N_U	11
A_{IC}	4.0
A_{IF}	5.0
A_{UC}	7.0
A_{UF}	12
A_{RW}	16
S_F	.50
M_F	9.0
M_L	24
C_L	250

6.8 TRANSISTORS, HIGH FREQUENCY, GaAs FET

SPECIFICATION
MIL-S-19500

DESCRIPTION
GaAs Low Noise, Driver and Power FETs (≥ 1GHz)

$$\lambda_p = \lambda_b \pi_T \pi_A \pi_M \pi_Q \pi_E \quad \text{Failures}/10^6 \text{ Hours}$$

Base Failure Rate - λ_b

Operating Frequency (GHz)	Average Output Power (Watts) < .1	.1	.5	1	2	4	6
1	.052	--	--	--	--	--	--
4	.052	.054	.066	.084	.14	.36	.96
5	.052	.083	.10	.13	.21	.56	1.5
6	.052	.13	.16	.20	.32	.85	2.3
7	.052	.20	.24	.30	.50	1.3	3.5
8	.052	.30	.37	.47	.76	2.0	
9	.052	.46	.56	.72	1.2		
10	.052	.71	.87	1.1	1.8		

$\lambda_b = .052$ $\quad 1 \le F \le 10, \quad P < .1$

$\lambda_b = .0093 \exp(.429(F) + .486(P))$ $\quad 4 \le F \le 10, \quad .1 \le P \le 6$

F = Frequency (GHz) $\quad$ P = Average Output Power (Watts)

The average output power represents the power output from the active device and should not account for any duty cycle in pulsed applications.

Temperature Factor - π_T

T_C (°C)	π_T	T_C (°C)	π_T
25	1.0	105	24
30	1.3	110	28
35	1.6	115	33
40	2.1	120	38
45	2.6	125	44
50	3.2	130	50
55	4.0	135	58
60	4.9	140	66
65	5.9	145	75
70	7.2	150	85
75	8.7	155	97
80	10	160	110
85	12	165	120
90	15	170	140
95	18	175	150
100	21		

$$\pi_T = \exp\left(-4485\left(\frac{1}{T_C + 273} - \frac{1}{298}\right)\right)$$

T_C = Channel Temperature (°C)

Application Factor - π_A

Application (P ≤ 6W)	π_A
All Low Power and Pulsed	1
CW	4

P = Average Output Power (Watts)

Matching Network Factor - π_M

Matching	π_M
Input and Output	1.0
Input Only	2.0
None	4.0

Quality Factor - π_Q

Quality	π_Q
JANTXV	.50
JANTX	1.0
JAN	2.0
Lower	5.0

Environment Factor - π_E

Environment	π_E
G_B	1.0
G_F	2.0
G_M	5.0
N_S	4.0
N_U	11
A_{IC}	4.0
A_{IF}	5.0
A_{UC}	7.0
A_{UF}	12
A_{RW}	16
S_F	.50
M_F	7.5
M_L	24
C_L	250

6.9 TRANSISTORS, HIGH FREQUENCY, SI FET

SPECIFICATION
MIL-S-19500

DESCRIPTION
Si FETs (Avg. Power < 300 mW, Freq. > 400 MHz)

$$\lambda_p = \lambda_b \pi_T \pi_Q \pi_E \quad \text{Failures}/10^6 \text{ Hours}$$

Base Failure Rate - λ_b

Transistor Type	λ_b
MOSFET	.060
JFET	.023

Temperature Factor - π_T

T_J (°C)	π_T	T_J (°C)	π_T
25	1.0	105	3.9
30	1.1	110	4.2
35	1.2	115	4.5
40	1.4	120	4.8
45	1.5	125	5.1
50	1.6	130	5.4
55	1.8	135	5.7
60	2.0	140	6.0
65	2.1	145	6.4
70	2.3	150	6.7
75	2.5	155	7.1
80	2.7	160	7.5
85	3.0	165	7.9
90	3.2	170	8.3
95	3.4	175	8.7
100	3.7		

$$\pi_T = \exp\left(-1925\left(\frac{1}{T_J + 273} - \frac{1}{298}\right)\right)$$

T_J = Junction Temperature (°C)

Quality Factor - π_Q

Quality	π_Q
JANTXV	.50
JANTX	1.0
JAN	2.0
Lower	5.0

Environment Factor - π_E

Environment	π_E
G_B	1.0
G_F	2.0
G_M	5.0
N_S	4.0
N_U	11
A_{IC}	4.0
A_{IF}	5.0
A_{UC}	7.0
A_{UF}	12
A_{RW}	16
S_F	.50
M_F	9.0
M_L	24
C_L	250

6.10 THYRISTORS AND SCRS

SPECIFICATION
MIL-S-19500

DESCRIPTION
Thyristors
SCRs, Triacs

$$\lambda_p = \lambda_b \pi_T \pi_R \pi_S \pi_Q \pi_E \quad \text{Failures}/10^6 \text{ Hours}$$

Base Failure Rate - λ_b

Device Type	λ_b
All Types	.0022

Temperature Factor - π_T

T_J (°C)	π_T	T_J (°C)	π_T
25	1.0	105	8.9
30	1.2	110	9.9
35	1.4	115	11
40	1.6	120	12
45	1.9	125	13
50	2.2	130	15
55	2.6	135	16
60	3.0	140	18
65	3.4	145	19
70	3.9	150	21
75	4.4	155	23
80	5.0	160	25
85	5.7	165	27
90	6.4	170	30
95	7.2	175	32
100	8.0		

$$\pi_T = \exp\left(-3082\left(\frac{1}{T_J + 273} - \frac{1}{298}\right)\right)$$

T_J = Junction Temperature (°C)

Current Rating Factor - π_R

Rated Forward Current ($I_{f_{rms}}$ (Amps))	π_R
.05	.30
.10	.40
.50	.76
1.0	1.0
5.0	1.9
10	2.5
20	3.3
30	3.9
40	4.4
50	4.8
60	5.1
70	5.5
80	5.8
90	6.0
100	6.3
110	6.6
120	6.8
130	7.0
140	7.2
150	7.4
160	7.6
170	7.8
175	7.9

$\pi_R = (I_{f_{rms}})^{.40}$

$I_{f_{rms}}$ = RMS Rated Forward Current (Amps)

6.10 THYRISTORS AND SCRS

Voltage Stress Factor - π_S

V_S (Blocking Voltage Applied/ Blocking Voltage Rated)	π_S
$V_S \leq .30$	.10
$.3 < V_S \leq .4$	.18
$.4 < V_S \leq .5$	.27
$.5 < V_S \leq .6$	.38
$.6 < V_S \leq .7$	.51
$.7 < V_S \leq .8$	.65
$.8 < V_S \leq .9$	.82
$.9 < V_S \leq 1.0$	1.0

$\pi_S = .10$ $(V_S \leq 0.3)$

$\pi_S = (V_S)^{1.9}$ $(V_S > 0.3)$

Environment Factor - π_E

Environment	π_E
G_B	1.0
G_F	6.0
G_M	9.0
N_S	9.0
N_U	19
A_{IC}	13
A_{IF}	29
A_{UC}	20
A_{UF}	43
A_{RW}	24
S_F	.50
M_F	14
M_L	32
C_L	320

Quality Factor - π_Q

Quality	π_Q
JANTXV	0.7
JANTX	1.0
JAN	2.4
Lower	5.5
Plastic	8.0

6.11 OPTOELECTRONICS, DETECTORS, ISOLATORS, EMITTERS

SPECIFICATION
MIL-S-19500

DESCRIPTION
Photodetectors, Opto-isolators, Emitters

$$\lambda_p = \lambda_b \pi_T \pi_Q \pi_E \text{ Failures/}10^6 \text{ Hours}$$

Base Failure Rate - λ_b

Optoelectronic Type	λ_b
Photodetectors	
Photo-Transistor	.0055
Photo-Diode	.0040
Opto-Isolators	
Photodiode Output, Single Device	.0025
Phototransistor Output, Single Device	.013
Photodarlington Output, Single Device	.013
Light Sensitive Resistor, Single Device	.0064
Photodiode Output, Dual Device	.0033
Phototransistor Output, Dual Device	.017
Photodarlington Output, Dual Device	.017
Light Sensitive Resistor, Dual Device	.0086
Emitters	
Infrared Light Emitting Diode (IRLD)	.0013
Light Emitting Diode (LED)	.00023

Temperature Factor - π_T

T_J (°C)	π_T	T_J (°C)	π_T
25	1.0	75	3.8
30	1.2	80	4.3
35	1.4	85	4.8
40	1.6	90	5.3
45	1.8	95	5.9
50	2.1	100	6.6
55	2.4	105	7.3
60	2.7	110	8.0
65	3.0	115	8.8
70	3.4		

$$\pi_T = \exp\left(-2790\left(\frac{1}{T_J + 273} - \frac{1}{298}\right)\right)$$

T_J = Junction Temperature (°C)

Quality Factor - π_Q

Quality	π_Q
JANTXV	.70
JANTX	1.0
JAN	2.4
Lower	5.5
Plastic	8.0

Environment Factor - π_E

Environment	π_E
G_B	1.0
G_F	2.0
G_M	8.0
N_S	5.0
N_U	12
A_{IC}	4.0
A_{IF}	6.0
A_{UC}	6.0
A_{UF}	8.0
A_{RW}	17
S_F	.50
M_F	9.0
M_L	24
C_L	450

6.12 OPTOELECTRONICS, ALPHANUMERIC DISPLAYS

SPECIFICATION
MIL-S-19500

DESCRIPTION
Alphanumeric Display

$$\lambda_p = \lambda_b \pi_T \pi_Q \pi_E \text{ Failures}/10^6 \text{ Hours}$$

Base Failure Rate - λ_b

Number of Characters	λ_b Segment Display	λ_b Diode Array Display
1	.00043	.00026
1 w/Logic Chip	.00047	.00030
2	.00086	.00043
2 w/Logic Chip	.00090	.00047
3	.0013	.00060
3 w/Logic Chip	.0013	.00064
4	.0017	.00077
4 w/Logic Chip	.0018	.00081
5	.0022	.00094
6	.0026	.0011
7	.0030	.0013
8	.0034	.0015
9	.0039	.0016
10	.0043	.0018
11	.0047	.0020
12	.0052	.0021
13	.0056	.0023
14	.0060	.0025
15	.0065	.0026

$\lambda_b = .00043(C) + \lambda_{IC}$, for Segment Displays

$\lambda_b = .00009 + .00017(C) + \lambda_{IC}$, Diode Array Displays

C = Number of Characters

λ_{IC} = .000043 for Displays with a Logic Chip

= 0.0 for Displays without Logic Chip

NOTE: The number of characters in a display is the number of characters contained in a single sealed package. For example, a 4 character display comprising 4 separately packaged single characters mounted together would be 4-one character displays, not 1-four character display.

Quality Factor - π_Q

Quality	π_Q
JANTXV	0.7
JANTX	1.0
JAN	2.4
Lower	5.5
Plastic	8.0

Temperature Factor - π_T

T_J (°C)	π_T	T_J (°C)	π_T
25	1.0	75	3.8
30	1.2	80	4.3
35	1.4	85	4.8
40	1.6	90	5.3
45	1.8	95	5.9
50	2.1	100	6.6
55	2.4	105	7.3
60	2.7	110	8.0
65	3.0	115	8.8
70	3.4		

$$\pi_T = \exp\left(-2790\left(\frac{1}{T_J + 273} - \frac{1}{298}\right)\right)$$

T_J = Junction Temperature (°C)

Environment Factor - π_E

Environment	π_E
G_B	1.0
G_F	2.0
G_M	8.0
N_S	5.0
N_U	12
A_{IC}	4.0
A_{IF}	6.0
A_{UC}	6.0
A_{UF}	8.0
A_{RW}	17
S_F	.50
M_F	9.0
M_L	24
C_L	450

6.13 OPTOELECTRONICS, LASER DIODE

SPECIFICATION
MIL-S-19500

DESCRIPTION
Laser Diodes with Optical Flux Densities
< 3 MW/cm^2 and Forward Current < 25 amps

$$\lambda_p = \lambda_b \pi_T \pi_Q \pi_I \pi_A \pi_P \pi_E \quad \text{Failures}/10^6 \text{ Hours}$$

Base Failure Rate - λ_b

Laser Diode Type	λ_b
GaAs/Al GaAs	3.23
In GaAs/In GaAsP	5.65

Temperature Factor - π_T

T_J (°C)	π_T
25	1.0
30	1.3
35	1.7
40	2.1
45	2.7
50	3.3
55	4.1
60	5.1
65	6.3
70	7.7
75	9.3

$$\pi_T = \exp\left(-4635\left(\frac{1}{T_J + 273} - \frac{1}{298}\right)\right)$$

T_J = Junction Temperature (°C)

Quality Factor - π_Q

Quality	π_Q
Hermetic Package	1.0
Nonhermetic with Facet Coating	1.0
Nonhermetic without Facet Coating	3.3

Forward Current Factor, π_I

Forward Peak Current (Amps)	π_I
.050	0.13
.075	0.17
.1	0.21
.5	0.62
1.0	1.0
2.0	1.6
3.0	2.1
4.0	2.6
5.0	3.0
10	4.8
15	6.3
20	7.7
25	8.9

$\pi_I = (I)^{.68}$

I = Forward Peak Current (Amps), $I \leq 25$

NOTE: For Variable Current Sources, use the Initial Current Value.

Application Factor π_A

Application	Duty Cycle	π_A
CW	———	4.4
Pulsed	.1	.32
	.2	.45
	.3	.55
	.4	.63
	.5	.71
	.6	.77
	.7	.84
	.8	.89
	.9	.95
	1.0	1.00

π_A = 4.4, CW

π_A = Duty Cycle $^{0.5}$, Pulsed

NOTE: A duty cycle of one in pulsed application represents the maximum amount it can be driven in a pulsed mode. This is different from continuous wave application which will not withstand pulsed operating levels on a continuous basis.

6.13 OPTOELECTRONICS, LASER DIODE

Power Degradation Factor - π_P

Ratio P_r/P_s	π_P
0.00	.50
.05	.53
.10	.56
.15	.59
.20	.63
.25	.67
.30	.71
.35	.77
.40	.83
.45	.91
.50	1.0
.55	1.1
.60	1.3
.65	1.4
.70	1.7
.75	2.0
.80	2.5
.85	3.3
.90	5.0
.95	10

$$\pi_P = \frac{1}{2\left(1 - \frac{Pr}{Ps}\right)} \qquad 0 < \frac{Pr}{Ps} \leq .95$$

P_s = Rated Optical Power Output (mW)

P_r = Required Optical Power Output (mW)

NOTE: Each laser diode must be replaced when power output falls to Pr for failure rate prediction to be valid.

Environment Factor - π_E

Environment	π_E
G_B	1.0
G_F	2.0
G_M	8.0
N_S	5.0
N_U	12
A_{IC}	4.0
A_{IF}	6.0
A_{UC}	6.0
A_{UF}	8.0
A_{RW}	17
S_F	.50
M_F	9.0
M_L	24
C_L	450

6.14 DISCRETE SEMICONDUCTORS, T_J DETERMINATION

Ideally, device case temperatures should be determined from a detailed thermal analysis of the equipment. Device junction temperature is then calculated with the following relationship:

$$T_J = T_C + \theta_{JC}P$$

where:

T_J = Junction Temperature (°C)

T_C = Case Temperature (°C). If no thermal analysis exists, the default case temperatures shown in Table 6-1 should be assumed.

θ_{JC} = Junction-to-Case Thermal Resistance (°C/W). This parameter should be determined from vendor, military specification sheets or Table 6-2, whichever is greater. It may also be estimated by taking the reciprocal of the recommended derating level. For example, a device derating recommendation of .16 W/°C would result in a θ_{JC} of 6.25 °C/W. If θ_{JC} cannot be determined assume a θ_{JC} value of 70°C/W.

P = Device Worse Case Power Dissipation (W)

The models are not applicable to devices at overstress conditions. If the calculated junction temperature is greater than the maximum rated junction temperature on the MIL slash sheets or the vendor's specifications, whichever is smaller, then the device is overstressed and these models **ARE NOT APPLICABLE.**

Table 6-1: Default Case Temperatures (T_C) for All Environments

Environment	T_C (°C)
G_B	35
G_F	45
G_M	50
N_S	45
N_U	50
A_{IC}	60
A_{IF}	60
A_{UC}	75
A_{UF}	75
A_{RW}	60
S_F	35
M_F	50
M_L	60
C_L	45

6.14 DISCRETE SEMICONDUCTORS, T_J DETERMINATION

Table 6-2: Approximate Junction-to-Case Thermal Resistance (θ_{JC}) for Semiconductor Devices in Various Package Sizes*

Package Type	θ_{JC} (°C/W)	Package Type	θ_{JC} (°C/W)
TO-1	70	TO-205AD	70
TO-3	10	TO-205AF	70
TO-5	70	TO-220	5
TO-8	70	DO-4	5
TO-9	70	DO-5	5
TO-12	70	DO-7	10
TO-18	70	DO-8	5
TO-28	5	DO-9	5
TO-33	70	DO-13	10
TO-39	70	DO-14	5
TO-41	10	DO-29	10
TO-44	70	DO-35	10
TO-46	70	DO-41	10
TO-52	70	DO-45	5
TO-53	5	DO-204MB	70
TO-57	5	DO-205AB	5
TO-59	5	PA-42A,B	70
TO-60	5	PD-36C	70
TO-61	5	PD-50	70
TO-63	5	PD-77	70
TO-66	10	PD-180	70
TO-71	70	PD-319	70
TO-72	70	PD-262	70
TO-83	5	PD-975	70
TO-89	22	PD-280	70
TO-92	70	PD-216	70
TO-94	5	PT-2G	70
TO-99	70	PT-6B	70
TO-126	5	PH-13	70
TO-127	5	PH-16	70
TO-204	10	PH-56	70
TO-204AA	10	PY-58	70
		PY-373	70

*When available, estimates must be based on military specification sheet or vendor values, whichever θ_{JC} is higher.

Example

Given: Silicon dual transistor (complementary), JAN grade, rated for 0.25 W at 25°C, one side only, and 0.35 W at 25°C, both sides, with T_{max} = 200°C, operating in linear service at 55°C case temperature in a sheltered naval environment. Side one, NPN, operating at 0.1 W and 50 percent of rated voltage and side two, PNP, operating at 0.05 W and 30 percent of rated voltage. The device operates at less than 200 MHz.

Since the device is a bipolar dual transistor operating at low frequency (<200 MHz), it falls into the Transistor, Low Frequency, Bipolar Group and the appropriate model is given in Section 6.3. Since the device is a dual device, it is necessary to compute the failure rate of each side separately and sum them together. Also, since θ_{JC} is unknown, θ_{JC} = 70°C/W will be assumed.

Based on the given information, the following model factors are determined from the appropriate tables shown in Section 6.3.

λ_b	=	.00074	
π_{T1}	=	2.2	Side 1, $T_J = T_C + \theta_{JC} P = 55 + 70(.1) = 62°C$
π_{T2}	=	2.1	Side 2, $T_J = 55 + 70(.05) = 59°C$
π_A	=	1.5	
π_R	=	.68	Using equation shown with π_R table, P_r = .35 W
π_{S1}	=	.21	Side 1, 50% Voltage Stress
π_{S2}	=	.11	Side 2, 30% Voltage Stress
π_Q	=	2.4	
π_E	=	9	

$$\lambda_p = \underbrace{\lambda_b \pi_{T1} \pi_A \pi_R \pi_{S1} \pi_Q \pi_E}_{\text{SIDE 1}} + \underbrace{\lambda_b \pi_{T2} \pi_A \pi_R \pi_{S2} \pi_Q \pi_E}_{\text{SIDE 2}}$$

$$\lambda_p = (.00074)(2.2)(1.5)(.68)(.21)(2.4)(9) + (.00074)(2.1)(1.5)(.68)(.11)(2.4)(9)$$

$$= .011 \text{ Failures}/10^6 \text{ Hours}$$

7.1 TUBES, ALL TYPES EXCEPT TWT AND MAGNETRON

DESCRIPTION
All Types Except Traveling Wave Tubes and Magnetrons. Includes Receivers, CRT, Thyratron, Crossed Field Amplifier, Pulsed Gridded, Transmitting, Vidicons, Twystron, Pulsed Klystron, CW Klystron

$$\lambda_p = \lambda_b \pi_L \pi_E \quad \text{Failures}/10^6 \text{ Hours}$$

Base Failure Rate - λ_b
(Includes Both Random and Wearout Failures)

Tube Type	λ_b
Receiver	
Triode, Tetrode, Pentode	5.0
Power Rectifier	10
CRT	9.6
Thyratron	50
Crossed Field Amplifier	
QK681	260
SFD261	150
Pulsed Gridded	
2041	140
6952	390
7835	140
Transmitting	
Triode, Peak Pwr. ≤ 200 KW, Avg. Pwr. ≤ 2KW, Freq. ≤ 200 MHz	75
Tetrode & Pentode, Peak Pwr. ≤ 200 KW, Avg. Power ≤ 2KW, Freq. ≤ 200 KW	100
If any of the above limits exceeded	250
Vidicon	
Antimony Trisulfide (Sb_2S_3) Photoconductive Material	51
Silicon Diode Array Photoconductive Material	48
Twystron	
VA144	850
VA145E	450
VA145H	490
VA913A	230
Klystron, Pulsed*	
4KMP10000LF	43
8568	230
L3035	66
L3250	69
L3403	93
SAC42A	100
VA842	18
Z5010A	150
ZM3038A	190

* If the pulsed Klystron of interest is not listed above, use the Alternate Pulsed Klystron λ_b Table on the following page.

Tube Type	λ_b
Klystron, Low Power, (e.g. Local Oscillator)	30
Klystron, Continuous Wave*	
3K3000LQ	9.0
3K50000LF	54
3K210000LQ	150
3KM300LA	64
3KM3000LA	19
3KM50000PA	110
3KM50000PA1	120
3KM50000PA2	150
4K3CC	610
4K3SK	29
4K50000LQ	30
4KM50LB	28
4KM50LC	15
4KM50SJ	38
4KM50SK	37
4KM3000LR	140
4KM50000LQ	79
4KM50000LR	57
4KM170000LA	15
8824	130
8825	120
8826	280
VA800E	70
VA853	220
VA856B	65
VA888E	230

* If the CW Klystron of interest is not listed above, use the Alternate CW Klystron λ_b Table on the following page.

7.1 TUBES, ALL TYPES EXCEPT TWT AND MAGNETRON

Alternate* Base Failure Rate for Pulsed Klystrons - λ_b

P(MW)	F(GHz) .2	.4	.6	.8	1.0	2.0	4.0	6.0
.01	16	16	16	16	16	16	16	16
.30	16	16	17	17	17	18	20	21
.80	16	17	17	18	18	21	25	30
1.0	17	17	18	18	19	22	28	34
3.0	18	20	21	23	25	34	51	
5.0	19	22	25	28	31	45	75	
8.0	21	25	30	35	40	63	110	
10	22	28	34	40	45	75		
25	31	45	60	75	90	160		

λ_b = 2.94 (F)(P) + 16

F = Operating Frequency in GHz, $0.2 \le F \le 6$

P = Peak Output Power in MW, $.01 \le P \le 25$ and $P \le 490\ F^{-2.95}$

*See previous page for other Klystron Base Failure Rates.

Alternate* Base Failure Rate for CW Klystrons - λ_b

P(KW)	F(MHz) 300	500	800	1000	2000	4000	6000	8000
0.1	30	31	33	34	38	47	57	66
1.0	31	32	33	34	39	48	57	66
3.0	32	33	34	35	40	49	58	
5.0	33	34	35	36	41	50		
8.0	34	35	37	38	42			
10	35	36	38	39	43			
30	45	46	48	49				
50	55	56	58	59				
80	70	71	73					
100	80	81						

λ_b = 0.5P + .00046F + 29

P = Average Output Power in KW, $0.1 \le P \le 100$ and $P \le 8.0(10)^6(F)^{-1.7}$

F = Operating Frequency in MHz, $300 \le F \le 8000$

*See previous page for other Klystron Base Failure Rates.

Learning Factor - π_L

T (years)	π_L
≤ 1	10
2	2.3
≥ 3	1.0

$\pi_L = 10(T)^{-2.1},\ 1 \le T \le 3$

$= 10,\ T \le 1$

$= 1,\ T \ge 3$

T = Number of Years since Introduction to Field Use

Environment Factor - π_E

Environment	π_E
G_B	.50
G_F	1.0
G_M	14
N_S	8.0
N_U	24
A_{IC}	5.0
A_{IF}	8.0
A_{UC}	6.0
A_{UF}	12
A_{RW}	40
S_F	.20
M_F	22
M_L	57
C_L	1000

DESCRIPTION
Traveling Wave Tubes

$$\lambda_p = \lambda_b \pi_E \quad \text{Failures}/10^6 \text{ Hours}$$

Base Failure Rate - λ_b

Power (W)	Frequency (GHz) .1	1	2	4	6	8	10	14	18
100	11	12	13	16	20	24	29	42	61
500	11	12	13	16	20	24	29	42	62
1000	11	12	14	16	20	24	29	43	62
3000	12	13	14	17	21	25	30	44	65
5000	12	13	15	18	22	26	32	46	68
8000	13	14	16	19	23	28	33	49	72
10000	14	15	16	20	24	29	35	51	75
15000	15	16	18	22	26	32	39	56	83
20000	17	18	20	24	29	35	43	62	91
30000	20	22	24	29	36	43	52	76	110
40000	25	27	30	36	43	53	64	93	140

$\lambda_b = 11(1.00002)^P (1.1)^F$

P = Rated Power in Watts (Peak, if Pulsed), $.001 \le P \le 40{,}000$

F = Operating Frequency in GHz, $.3 \le F \le 18$.

If the operating frequency is a band, or two different values, use the geometric mean of the end point frequencies when using table.

Environment Factor - π_E

Environment	π_E
G_B	1.0
G_F	3.0
G_M	14
N_S	6.0
N_U	21
A_{IC}	10
A_{IF}	14
A_{UC}	11
A_{UF}	18
A_{RW}	40
S_F	.10
M_F	22
M_L	66
C_L	1000

7.3 TUBES, MAGNETRON

DESCRIPTION

Magnetrons, Pulsed and Continuous Wave (CW)

$$\lambda_p = \lambda_b \pi_U \pi_C \pi_E \quad \text{Failures}/10^6 \text{ Hours}$$

Base Failure Rate - λ_b

P(MW)	Frequency (GHz) .1	.5	1	5	10	20	30	40	50	60	70	80	90	100
.01	1.4	4.6	7.6	24	41	67	91	110	130	150	170	190	200	220
.05	1.9	6.3	10	34	56	93	120	150	180	210	230	260	280	300
.1	2.2	7.2	12	39	64	110	140	180	210	240	270	290	320	350
.3	2.8	9.0	15	48	80	130	180	220	260	300	330	370	400	430
.5	3.1	10	17	54	89	150	200	240	290	330	370	410	440	480
1	3.5	11	19	62	100	170	230	280	330	380	420	470	510	550
3	4.4	14	24	77	130	210	280	350	410	470	530	580	630	680
5	4.9	16	26	85	140	230	310	390	460	520	580	640	700	760

Pulsed Magnetrons:

$\lambda_b = 19(F)^{.73}(P)^{.20}$

F = Operating Frequency in GHz, $.1 \le F \le 100$

P = Output Power in MW, $.01 \le P \le 5$

CW Magnetrons (Rated Power < 5 KW):

$\lambda_b = 18$

Utillization Factor - π_U

Utilization (Radiate Hours/ Filament Hours)	π_U
0.0	.44
0.1	.50
0.2	.55
0.3	.61
0.4	.66
0.5	.72
0.6	.78
0.7	.83
0.8	.89
0.9	.94
1.0	1.0

$\pi_U = 0.44 + 0.56R$

R = Radiate Hours/Filament Hours

Construction Factor - π_C

Construction	π_C
CW (Rated Power < 5 KW)	1.0
Coaxial Pulsed	1.0
Conventional Pulsed	5.4

Environment Factor - π_E

Environment	π_E
G_B	1.0
G_F	2.0
G_M	4.0
N_S	15
N_U	47
A_{IC}	10
A_{IF}	16
A_{UC}	12
A_{UF}	23
A_{RW}	80
S_F	.50
M_F	43
M_L	133
C_L	2000

8.0 LASERS, INTRODUCTION

The models and failure rates presented in this section apply to laser peculiar items only, i.e., those items wherein the lasing action is generated and controlled. In addition to laser peculiar items, there are other assemblies used with lasers that contain electronic parts and mechanical devices (pumps, valves, hoses, etc.). The failure rates for these parts should be determined with the same procedures as used for other electronic and mechanical devices in the equipment or system of which the laser is a part.

The laser failure rate models have been developed at the "functional," rather than "piece part" level because the available data were not sufficient for "piece part" model development. Nevertheless, the laser functional models are included in this Handbook in the interest of completeness. These laser models will be revised to include piece part models and other laser types when the data become available.

Because each laser family can be designed using a variety of approaches, the failure rate models have been structured on three basic laser functions which are common to most laser families, but may differ in the hardware implementation of a given function. These functions are the lasing media, the laser pumping mechanism (or pump), and the coupling method.

Examples of media-related hardware and reliability influencing factors are the solid state rod, gas, gas pressure, vacuum integrity, gas mix, outgassing, and tube diameter. The electrical discharge, the flashlamp, and energy level are examples of pump-related hardware and reliability influencing factors. The coupling function reliability influencing factors are the "Q" switch, mirrors, windows, crystals, substrates, coatings, and level of dust protection provided.

Some of the laser models require the number of active optical surfaces as an input parameter. An active optical surface is one with which the laser energy (or beam) interacts. Internally reflecting surfaces are not counted. Figure 8-1 below illustrates examples of active optical surfaces and count.

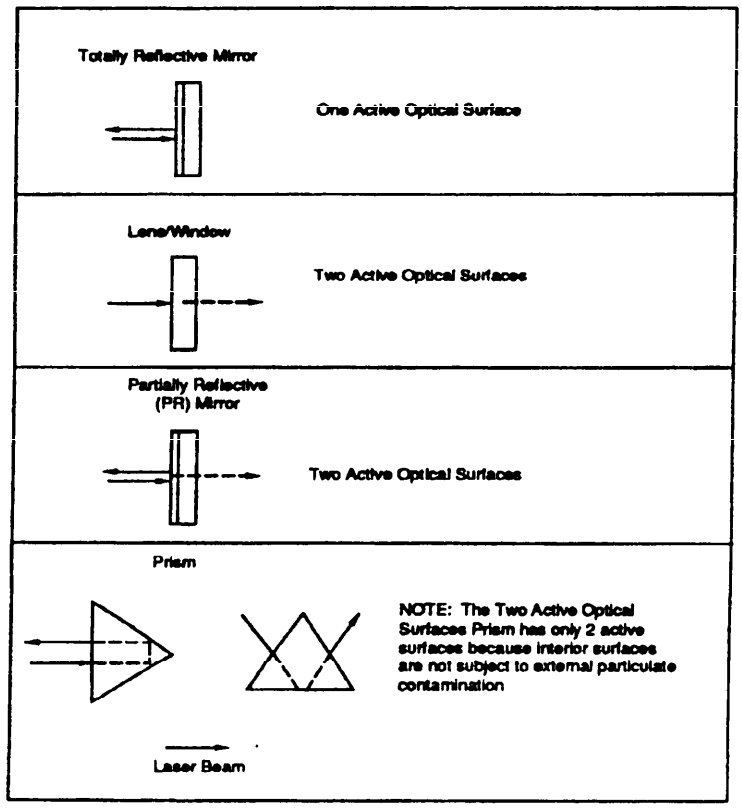

Figure 8-1: Examples of Active Optical Surfaces

8.1 LASERS, HELIUM AND ARGON

DESCRIPTION
Helium Neon Lasers
Helium Cadmium Lasers
Argon Lasers

$$\lambda_p = \lambda_{MEDIA}\pi_E + \lambda_{COUPLING}\pi_E \text{ Failures/}10^6 \text{ Hours}$$

Lasing Media Failure Rate - λ_{MEDIA}

Type	λ_{MEDIA}
He/Ne	84
He/Cd	228
Argon	457

Coupling Failure Rate - $\lambda_{COUPLING}$

Types	$\lambda_{COUPLING}$
Helium	0
Argon	6

NOTE: The predominant argon laser failure mechanism is related to the gas media (as reflected in λ_{MEDIA}; however, when the tube is refilled periodically (preventive maintenance) the mirrors (as part of $\lambda_{COUPLING}$) can be expected to deteriorate after approximately 10^4 hours of operation if in contact with the discharge region. $\lambda_{COUPLING}$ is negligible for helium lasers.

Environment Factor - π_E

Environment	π_E
G_B	.30
G_F	1.0
G_M	4.0
N_S	3.0
N_U	4.0
A_{IC}	4.0
A_{IF}	6.0
A_{UC}	7.0
A_{UF}	9.0
A_{RW}	5.0
S_F	.10
M_F	3.0
M_L	8.0
C_L	N/A

DESCRIPTION
CO_2 Sealed Continuous Wave Lasers

$$\lambda_p = \lambda_{MEDIA}\pi_O\pi_B\pi_E + 10\,\pi_{OS}\pi_E \quad \text{Failures}/10^6 \text{ Hours}$$

Lasing Media Failure Rate - λ_{MEDIA}

Tube Current (mA)	λ_{MEDIA}
10	240
20	930
30	1620
40	2310
50	3000
100	6450
150	9900

$\lambda_{MEDIA} = 69(I) - 450$

I = Tube Current (mA), $10 \le I \le 150$

Gas Overfill Factor = π_O

CO_2 Overfill Percent (%)	π_O
0	1.0
25	.75
50	.50

$\pi_O = 1 - .01$ (% Overfill)

Overfill percent is based on the percent increase over the optimum CO_2 partial pressure which is normally in the range of 1.5 to 3 T_{orr} (1 T_{orr} = 1 mm Hg Pressure) for most sealed CO_2 lasers.

Ballast Factor - π_B

Percent of Ballast Volumetric Increase	π_B
0	1.0
50	.58
100	.33
150	.19
200	.11

$\pi_B = (1/3)$ (% Vol. Inc./100)

Optical Surface Factor - π_{OS}

Active Optical Surfaces	π_{OS}
1	1
2	2

π_{OS} = Number of Active Optical Surfaces

NOTE: Only active optical surfaces are counted. An active optical surface is one with which the laser energy or beam interacts. Internally reflecting surfaces are not counted. See Figure 8-1 for examples on determining the number of optical surfaces.

Environment Factor - π_E

Environment	π_E
G_B	.30
G_F	1.0
G_M	4.0
N_S	3.0
N_U	4.0
A_{IC}	4.0
A_{IF}	6.0
A_{UC}	7.0
A_{UF}	9.0
A_{RW}	5.0
S_F	.10
M_F	3.0
M_L	8.0
C_L	N/A

8.3 LASERS, CARBON DIOXIDE, FLOWING

DESCRIPTION
CO_2 Flowing Lasers

$$\lambda_p = \lambda_{COUPLING}\pi_{OS}\pi_E \text{ Failures}/10^6 \text{ Hours}$$

Coupling Failure Rate - $\lambda_{COUPLING}$

Power (KW)	$\lambda_{COUPLING}$
.01	3
.1	30
1.0	300

$\lambda_{COUPLING} = 300P$

P = Average Power Output in KW. $.01 \leq P \leq 1.0$

Beyond the 1KW range other glass failure mechanisms begin to predominate and alter the $\lambda_{COUPLING}$ values. It should also be noted that CO_2 flowing laser optical devices are the primary source of failure occurrence. A tailored optical cleaning preventive maintenance program on optic devices greatly extends laser life.

Optical Surface Factor - π_{OS}

Active Optical Surfaces	π_{OS}
1	1
2	2

π_{OS} = Number of Active Optical Surfaces

NOTE: Only active optical surfaces are counted. An active optical surface is one with which the laser energy or beam interacts. Internally reflecting surfaces are not counted. See Figure 8-1 for examples on determining the number of optical surfaces.

Environment Factor - π_E

Environment	π_E
G_B	.30
G_F	1.0
G_M	4.0
N_S	3.0
N_U	4.0
A_{IC}	4.0
A_{IF}	6.0
A_{UC}	7.0
A_{UF}	9.0
A_{RW}	5.0
S_F	.10
M_F	3.0
M_L	8.0
C_L	N/A

8.4 LASERS, SOLID STATE, ND:YAG AND RUBY ROD

DESCRIPTION
Neodymium-Yttrium-Aluminum-Garnet (ND:YAG) Rod Lasers

Ruby Rod Lasers

$$\lambda_p = (\lambda_{PUMP} + \lambda_{MEDIA} + 16.3\,\pi_C\pi_{OS})\,\pi_E \text{ Failures}/10^6 \text{ Hours}$$

Pump Pulse Failure Rate - λ_{PUMP} (Xenon Flashlamps)

The empirical formula used to determine λ_{PUMP} (Failures/10^6 Hours) for Xenon lamps is:

$$\lambda_{PUMP} = (3600)\,(PPS)\left[2000\left(\frac{E_j}{dL\sqrt{t}}\right)^{8.58}\right][\pi_{COOL}]$$

λ_{PUMP} is the failure rate contribution of the Xenon flashlamp or flashtube. The flashlamps evaluated herein are linear types used for military solid state laser systems. Typical default model parameters are given below.

PPS is the repetition pulse rate in pulses per second. Typical values range between 1 and 20 pulses per second.

E_j is the flashlamp or flashtube input energy per pulse, in joules. Its value is determined from the actual or design input energy. For values less than 30 joules, use $E_j = 30$. Default value: $E_j = 40$.

d is the flashlamp or flashtube inside diameter, in millimeters. Default value: d = 4.

L is the flashlamp or flashtube arc length in inches. Default value: L = 2.

t is the truncated pulse width in microseconds. Use t = 100 microseconds for any truncated pulse width exceeding 100 microseconds. For shorter duration pulses, pulse width is to be measured at 10 percent of the maximum current amplitude. Default value: t = 100.

π_{COOL} is the cooling factor due to various cooling media immediately surrounding the flashlamp or flashtube. $\pi_{COOL} = 1.0$ for any air or inert gas cooling. $\pi_{COOL} = .1$ for all liquid cooled designs. Default value: $\pi_{COOL} = .1$, liquid cooled.

Pump Pulse Failure Rate - λ_{PUMP} (Krypton Flashlamps)

The empirical formula used to determine λ_{PUMP} for Krypton lamp is:

$$\lambda_{PUMP} = [625]\left[10^{(0.9\frac{P}{L})}\right]\left[\pi_{COOL}\right] \text{ Failures}/10^6 \text{ Hours}$$

λ_{PUMP} is the failure rate contribution of the krypton flashlamp or flashtube. The flashlamps evaluted herein are the continuous wave (CW) type and are most widely used for commercial solid state applications. They are approx-imately 7mm in diameter and 5 to 6 inches long.

P is the average input power in kilowatts. Default value: P = 4.

L is the flashlamp or flashtube arc length in inches. Default value: L = 2.

π_{COOL} is the cooling factor due to various cooling media immediately surrounding the flashlamp or flashtube. $\pi_{COOL} = 1$ for any air or inert gas cooling. $\pi_{COOL} = .1$ for all liquid designs. Default value: $\pi_{COOL} = .1$, liquid cooled.

Media Failure Rate - λ_{MEDIA}

Laser Type	λ_{MEDIA}
ND:YAG	0
Ruby	(3600) (PPS) [43.5 $F^{2.52}$]

PPS is the number of pulses per second

F is the energy density in Joules per cm.^{2}/pulse over the cross-sectional area of the laser beam, which is nominally equivalent to the cross-sectional area of the laser rod, and its value is determined from the actual design parameter of the laser rod utilized.

NOTE: λ_{MEDIA} is negligible for ND:YAG lasers.

8.4 LASERS, SOLID STATE, ND:YAG AND RUBY ROD

Coupling Cleanliness Factor - π_C

Cleanliness Level	π_C
Rigorous cleanliness procedures and trained maintenance personnel. Bellows provided over optical train.	1
Minimal precautions during opening, maintenance, repair, and testing. Bellows provided over optical train.	30
Minimal precautions during opening, maintenance, repair, and testing. No bellows provided over optical train.	60

NOTE: Although sealed systems tend to be reliable once compatible materials have been selected and proven, extreme care must still be taken to prevent the entrance of particulates during manufacturing, field flashlamp replacement, or routine maintenance/repair. Contamination is the major cause of solid state laser malfunction, and special provisions and vigilance must continually be provided to maintain the cleanliness level required.

Environment Factor - π_E

Environment	π_E
G_B	.30
G_F	1.0
G_M	4.0
N_S	3.0
N_U	4.0
A_{IC}	4.0
A_{IF}	6.0
A_{UC}	7.0
A_{UF}	9.0
A_{RW}	5.0
S_F	.10
M_F	3.0
M_L	8.0
C_L	N/A

Optical Surface Factor - π_{OS}

Active Optical Surfaces	π_{OS}
1	1
2	2

π_{OS} = Number of Active Optical Surfaces

NOTE: Only active optical surfaces are counted. An active optical surface is one with which the laser energy or beam interacts. Internally reflecting surfaces are not counted. See Figure 8-1 for examples on determining the number of optical surfaces.

9.0 RESISTORS, INTRODUCTION

This section includes the active resistor specifications and, in addition, some older/inactive specifications are included because of the large number of equipments still in field use which contain these parts.

The Established Reliability (ER) resistor family generally has four qualification failure rate levels when tested per the requirements of the applicable specification. These qualification failure rate levels differ by a factor of ten (from one level to the next). However, field data has shown that these failure rate levels differ by a factor of about only three, hence the π_Q values have been set accordingly.

The use of the resistor models requires the calculation of the electrical power stress ratio, Stress = operating power/rated power, or per Section 9.16 for variable resistors. The models have been structured such that derating curves do not have to be used to find the base failure rate. The rated power for the stress ratio is equal to the full nominal rated power of the resistor. For example, a MIL-R-39008 resistor has the following derating curve:

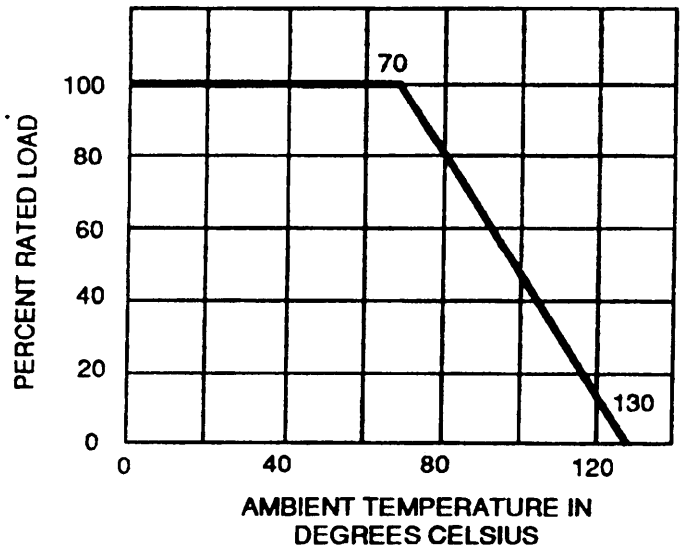

Figure 9-1: MIL-R-39008 Derating Curve

This particular resistor has a rating of 1 watt at 70°C ambient, or below. If it were being used in an ambient temperature of 100°C, the rated power for the stress calculation would still be 1 watt, not 45% of 1 watt (as read off the curve for 100°C). Of course, while the derating curve is not needed to determine the base failure rate, it must still be observed as the maximum operating condition. To aid in determining if a resistor is being used within rated conditions, the base failure rate tables show entries up to certain combinations of stress and temperature. If a given operating stress and temperature point falls in the blank portion of the base failure rate table, the resistor is overstressed. Such misapplication would require an analysis of the circuit and operating conditions to bring the resistor within rated conditions.

9.1 RESISTORS, FIXED, COMPOSITION

SPECIFICATION	STYLE	DESCRIPTION
MIL-R-39008	RCR	Resistors, Fixed, Composition (Insulated), Established Reliability
MIL-R-11	RC	Resistors, Fixed, Composition (Insulated)

$$\lambda_p = \lambda_b \pi_R \pi_Q \pi_E \text{ Failures}/10^6 \text{ Hours}$$

Base Failure Rate - λ_b

T_A (°C)	Stress .1	.3	.5	.7	.9
0	.00007	.00010	.00015	.00020	.00028
10	.00011	.00015	.00021	.00030	.00043
20	.00015	.00022	.00031	.00045	.00064
30	.00022	.00031	.00046	.00066	.00096
40	.00031	.00045	.00067	.00098	.0014
50	.00044	.00066	.00098	.0014	.0021
60	.00063	.00095	.0014	.0021	.0032
70	.00090	.0014	.0021	.0032	.0048
80	.0013	.0020	.0031	.0047	
90	.0018	.0029	.0045		
100	.0026	.0041	.0065		
110	.0038	.0060			
120	.0054				

$$\lambda_b = 4.5 \times 10^{-9} \exp\left(12\left(\frac{T+273}{343}\right)\right)\exp\left(\frac{S}{.6}\left(\frac{T+273}{273}\right)\right)$$

T = Ambient Temperature (°C)

S = Ratio of Operating Power to Rated Power

Resistance Factor - π_R

Resistance Range (ohms)	π_R
< .1 M	1.0
> .1 M to 1 M	1.1
> 1.0 M to 10 M	1.6
> 10 M	2.5

Quality Factor - π_Q

Quality	π_Q
S	.03
R	0.1
P	0.3
M	1.0
MIL-R-11	5.0
Lower	15

Environment Factor - π_E

Environment	π_E
G_B	1.0
G_F	3.0
G_M	8.0
N_S	5.0
N_U	13
A_{IC}	4.0
A_{IF}	5.0
A_{UC}	7.0
A_{UF}	11
A_{RW}	19
S_F	.50
M_F	11
M_L	27
C_L	490

9.2 RESISTORS, FIXED, FILM

SPECIFICATION	STYLE	DESCRIPTION
MIL-R-39017	RLR	Fixed, Film, Insulated, Established Reliability
MIL-R-22684	RL	Fixed, Film, Insulated
MIL-R-55182	RN (R, C, or N)	Fixed, Film, Established Reliability
MIL-R-10509	RN	Fixed, Film, High Stability

$$\lambda_p = \lambda_b \pi_R \pi_Q \pi_E \text{ Failures}/10^6 \text{ Hours}$$

Base Failure Rate - λ_b
(MIL-R-22684 and MIL-R-39017)

T_A (°C)	Stress .1	.3	.5	.7	.9
0	.00059	.00073	.00089	.0011	.0013
10	.00063	.00078	.00096	.0012	.0014
20	.00067	.00084	.0010	.0013	.0016
30	.00072	.00090	.0011	.0014	.0018
40	.00078	.00098	.0012	.0016	.0019
50	.00084	.0011	.0014	.0017	.0022
60	.00092	.0012	.0015	.0019	.0024
70	.0010	.0013	.0017	.0021	.0027
80	.0011	.0014	.0018	.0024	
90	.0012	.0016	.0021	.0027	
100	.0013	.0018	.0023		
110	.0015	.0020	.0026		
120	.0017	.0023			
130	.0019				
140	.0022				

$$\lambda_b = 3.25 \times 10^{-4} \exp\left(\frac{T+273}{343}\right)^3 \exp\left(S\left(\frac{T+273}{273}\right)\right)$$

T = Ambient Temperature (°C)

S = Ratio of Operating Power to Rated Power

Base Failure Rate - λ_b
(MIL-R-10509 and MIL-R-55182)

T_A (°C)	Stress .1	.3	.5	.7	.9
0	.00061	.00074	.00091	.0011	.0014
10	.00067	.00082	.0010	.0012	.0015
20	.00073	.00091	.0011	.0014	.0017
30	.00080	.0010	.0013	.0016	.0019
40	.00088	.0011	.0014	.0017	.0022
50	.00096	.0012	.0015	.0020	.0025
60	.0011	.0013	.0017	.0022	.0028
70	.0012	.0015	.0019	.0025	.0032
80	.0013	.0016	.0021	.0028	.0036
90	.0014	.0018	.0024	.0031	.0040
100	.0015	.0020	.0026	.0035	.0045
110	.0017	.0022	.0029	.0039	.0051
120	.0018	.0024	.0033	.0043	.0058
130	.0020	.0027	.0036	.0049	.0065
140	.0022	.0030	.0040	.0054	
150	.0024	.0033	.0045		
160	.0026	.0036			
170	.0029				

$$\lambda_b = 5 \times 10^{-5} \exp\left(3.5\left(\frac{T+273}{398}\right)\right) \exp\left(S\left(\frac{T+273}{273}\right)\right)$$

T = Ambient Temperature (°C)

S = Ratio of Operating Power to Rated Power

NOTE: Do not use MIL-R-10509 (Characteristic B) below the line. Points below are overstressed.

9.2 RESISTORS, FIXED, FILM

Resistance Factor - π_R

Resistance Range (ohms)	π_R
< .1M	1.0
≥ 0.1 M to 1 M	1.1
> 1.0 M to 10 M	1.6
> 10 M	2.5

Quality Factor - π_Q

Quality	π_Q
S	.03
R	0.1
P	0.3
M	1.0
MIL-R-10509	5.0
MIL-R-22684	5.0
Lower	15

Environment Factor - π_E

Environment	π_E
G_B	1.0
G_F	2.0
G_M	8.0
N_S	4.0
N_U	14
A_{IC}	4.0
A_{IF}	8.0
A_{UC}	10
A_{UF}	18
A_{RW}	19
S_F	.20
M_F	10
M_L	28
C_L	510

9.3 RESISTORS, FIXED, FILM, POWER

SPECIFICATION	STYLE	DESCRIPTION
MIL-R-11804	RD	Fixed, Film, Power Type

$$\lambda_p = \lambda_b \pi_R \pi_Q \pi_E \text{ Failures}/10^6 \text{ Hours}$$

Base Failure Rate - λ_b

T_A (°C)	Stress .1	.3	.5	.7	.9
0	.0089	.0098	.011	.013	.015
10	.0090	.010	.011	.013	.015
20	.0092	.010	.012	.014	.016
30	.0094	.010	.012	.014	.017
40	.0096	.011	.012	.015	.017
50	.0098	.011	.013	.015	
60	.010	.011	.013	.016	
70	.010	.012	.014	.016	
80	.010	.012	.014	.017	
90	.011	.012	.015		
100	.011	.013	.015		
110	.011	.013	.016		
120	.012	.014	.016		
130	.012	.014	.017		
140	.012	.014			
150	.013	.015			
160	.013	.016			
170	.014	.016			
180	.014				
190	.015				
200	.015				
210	.016				

$$\lambda_b = 7.33 \times 10^{-3} \exp\left(.202\left(\frac{T+273}{298}\right)^{2.6}\right) \times \exp\left(\left(\frac{S}{1.45}\right)\left(\frac{T+273}{273}\right)^{.89}\right)^{1.3}$$

T = Ambient Temperature (°C)

S = Ratio of Operating Power to Rated Power

Quality Factor - π_Q

Quality	π_Q
MIL-SPEC	1.0
Lower	3.0

Environment Factor - π_E

Environment	π_E
G_B	1.0
G_F	2.0
G_M	10
N_S	5.0
N_U	17
A_{IC}	6.0
A_{IF}	8.0
A_{UC}	14
A_{UF}	18
A_{RW}	25
S_F	.50
M_F	14
M_L	36
C_L	660

Resistance Factor - π_R

Resistance Range (ohms)	π_R
10 to 100	1.0
> 100 to 100K	1.2
> 100K to 1M	1.3
> 1M	3.5

9.4 RESISTORS, NETWORK, FIXED, FILM

SPECIFICATION	STYLE	DESCRIPTION
MIL-R-83401	RZ	Resistor Networks, Fixed, Film

$$\lambda_p = .00006\, \pi_T\, \pi_{NR} \pi_Q \pi_E \text{ Failures}/10^6 \text{ Hours}$$

Temperature Factor - π_T

T_C (°C)	π_T	T_C (°C)	π_T
25	1.0	80	8.3
30	1.3	85	9.8
35	1.6	90	11
40	1.9	95	13
45	2.4	100	15
50	2.9	105	18
55	3.5	110	21
60	4.2	115	24
65	5.0	120	27
70	6.0	125	31
75	7.1		

$$\pi_T = \exp\left(-4056\left(\frac{1}{T_C + 273} - \frac{1}{298}\right)\right)$$

T_C = Case Temperature (°C)

NOTE: If T_C is unknown, it can be estimated as follows:

$T_C = T_A + 55\,(S)$

T_A = Ambient Temperature (°C)

$$S = \frac{\text{Operating Power}}{\text{Package Rated Power}}$$

Any device operating at T_C > 125°C is overstressed.

Quality Factor - π_Q

Quality	π_Q
MIL-SPEC	1
Lower	3

Environment Factor - π_E

Environment	π_E
G_B	1.0
G_F	2.0
G_M	8.0
N_S	4.0
N_U	14
A_{IC}	4.0
A_{IF}	8.0
A_{UC}	9.0
A_{UF}	18
A_{RW}	19
S_F	.50
M_F	14
M_L	28
C_L	510

Number of Resistors Factor - π_{NR}

π_{NR} = Number of Film Resistors in Use

NOTE: Do not include resistors that are not used.

9.5 RESISTORS, FIXED, WIREWOUND

SPECIFICATION	STYLE	DESCRIPTION
MIL-R-39005	RBR	Fixed, Wirewound, Accurate, Established Reliability
MIL-R-93	RB	Fixed, Wirewound, Accurate

$$\lambda_p = \lambda_b \pi_R \pi_Q \pi_E \text{ Failures}/10^6 \text{ Hours}$$

Base Failure Rate - λ_b

T_A (°C)	Stress .1	.3	.5	.7	.9
0	.0033	.0037	.0045	.0057	.0075
10	.0033	.0038	.0047	.0059	.0079
20	.0034	.0039	.0048	.0062	.0084
30	.0034	.0040	.0050	.0066	.0090
40	.0035	.0042	.0052	.0070	.0097
50	.0037	.0043	.0055	.0075	.011
60	.0038	.0046	.0059	.0081	.012
70	.0041	.0049	.0064	.0089	.013
80	.0044	.0053	.0070	.0099	.015
90	.0048	.0059	.0079	.011	.017
100	.0055	.0068	.0092	.013	.020
110	.0065	.0080	.011	.016	.025
120	.0079	.0099	.014	.021	.033
130	.010	.013	.018	.028	
140	.014				

$$\lambda_b = .0031 \exp\left(\frac{T+273}{398}\right)^{10} \exp\left(S\left(\frac{T+273}{273}\right)\right)^{1.5}$$

T = Ambient Temperature (°C)

S = Ratio of Operating Power to Rated Power

Resistance Factor - π_R

Resistance Range (ohms)	π_R
Up to 10K	1.0
> 10K to 100K	1.7
> 100K to 1M	3.0
> 1M	5.0

Quality Factor - π_Q

Quality	π_Q
S	.030
R	.10
P	.30
M	1.0
MIL-R-93	5.0
Lower	15

Environment Factor - π_E

Environment	π_E
G_B	1.0
G_F	2.0
G_M	11
N_S	5.0
N_U	18
A_{IC}	15
A_{IF}	18
A_{UC}	28
A_{UF}	35
A_{RW}	27
S_F	.80
M_F	14
M_L	38
C_L	610

DESCRIPTION

9.6 RESISTORS, FIXED, WIREWOUND, POWER

SPECIFICATION	STYLE	DESCRIPTION
MIL-R-39007	RWR	Fixed, Wirewound, Power Type, Established Reliability
MIL-R-26	RW	Fixed, Wirewound, Power Type

$$\lambda_p = \lambda_b \pi_R \pi_Q \pi_E \text{ Failures}/10^6 \text{ Hours}$$

Base Failure Rate - λ_b

T_A (°C)	Stress .1	.3	.5	.7	.9
0	.0042	.0062	.0093	.014	.021
10	.0045	.0068	.010	.016	.024
20	.0048	.0074	.011	.017	.027
30	.0052	.0081	.013	.020	.031
40	.0056	.0089	.014	.022	.035
50	.0061	.0097	.016	.025	.040
60	.0066	.011	.017	.028	
70	.0072	.012	.020	.032	
80	.0078	.013	.022	.037	
90	.0085	.014	.025	.042	
100	.0093	.016	.028	.048	
110	.010	.018	.031	.055	
120	.011	.020	.036	.063	
130	.012	.022	.040		
140	.014	.025	.046		
150	.015	.028	.052		
160	.017	.032	.060		
170	.019	.036	.068		
180	.021	.040	.078		
190	.023	.046			
200	.026	.052			
210	.029	.059			
220	.033	.068			
230	.037	.077			
240	.042	.088			
250	.047	.10			
260	.054				
270	.061				
280	.06				
290	.079				
300	.091				
310	.10				

$$\lambda_b = .00148 \exp\left(\frac{T+273}{298}\right)^2 \exp\left(\left(\frac{S}{.5}\right)\left(\frac{T+273}{273}\right)\right)$$

T = Ambient Temperature (°C)

S = Ratio of Operating Power to Rated Power

NOTE: Do not use MIL-R-39007 Resistors below the line. Points below are overstressed.

Resistance Factor - π_R
(MIL-R-39007)

MIL-R-39009 Style	Up to 500	Resistance Range (ohms) >500 to 1K	>1K to 5K	>5K to 7.5K	>7.5 K to 10K	>10K to 15K	>15K to 20K	>20K
RWR 71	1.0	1.0	1.2	1.2	1.6	1.6	1.6	NA
RWR 74	1.0	1.0	1.0	1.2	1.6	1.6	NA	NA
RWR 78	1.0	1.0	1.0	1.0	1.2	1.2	1.2	1.6
RWR 80	1.0	1.2	1.6	1.6	NA	NA	NA	NA
RWR 81	1.0	1.6	NA	NA	NA	NA	NA	NA
RWR 82	1.0	1.6	1.6	NA	NA	NA	NA	NA
RWR 84	1.0	1.0	1.1	1.2	1.2	1.6	NA	NA
RWR 89	1.0	1.0	1.4	NA	NA	NA	NA	NA

Quality Factor - π_Q

Quality	π_Q
S	.03
R	.10
P	.30
M	1.0
MIL-R-26	5.0
Lower	15

9.6 RESISTORS, FIXED, WIREWOUND, POWER

Resistance Factor - π_R

(MIL-R-26)

MIL-R-26 Style	Resistance Range (ohms) Up to 100	>100 to 1K	>1K to 10K	>10K to 100K	>100K to 150K	>150K to 200K
RW 10	1.0	1.0	1.0	1.0	1.2	1.6
RW 11	1.0	1.0	1.0	1.2	1.6	NA
RW12	1.0	1.0	1.2	1.6	NA	NA
RW 13	1.0	1.0	1.0	2.0	NA	NA
RW 14	1.0	1.0	1.0	2.0	NA	NA
RW 15	1.0	1.0	1.2	2.0	NA	NA
RW 16	1.0	1.2	1.4	NA	NA	NA
RW 20	1.0	1.0	1.6	NA	NA	NA
RW 21	1.0	1.0	1.2	2.0	NA	NA
RW 22	1.0	1.0	1.2	1.6	NA	NA
RW 23	1.0	1.0	1.0	1.4	NA	NA
RW 24	1.0	1.0	1.0	1.2	NA	NA
RW 29	1.0	1.0	1.4	NA	NA	NA
RW 30	1.0	1.2	1.6	NA	NA	NA
RW 31	1.0	1.0	1.4	NA	NA	NA
RW 32	1.0	1.0	1.2	NA	NA	NA
RW 33	1.0	1.0	1.0	1.4	NA	NA
RW 34	1.0	1.0	1.0	1.4	NA	NA
RW 35	1.0	1.0	1.0	1.4	NA	NA
RW 36	1.0	1.0	1.2	1.5	NA	NA
RW 37	1.0	1.0	1.2	1.6	NA	NA
RW 38	1.0	1.0	1.0	1.4	1.6	NA
RW 39	1.0	1.0	1.0	1.4	1.6	2.0
RW 47	1.0	1.0	1.0	1.4	1.6	2.0
RW 55	1.0	1.0	1.4	2.4	NA	NA
RW 56	1.0	1.0	1.2	2.6	NA	NA
RW 67	1.0	1.0	1.0	NA	NA	NA
RW 68	1.0	1.0	1.0	NA	NA	NA
RW 69	1.0	1.0	NA	NA	NA	NA
RW 70	1.0	1.2	1.4	NA	NA	NA
RW 74	1.0	1.0	1.2	1.6	NA	NA
RW 78	1.0	1.0	1.0	1.6	NA	NA
RW 79	1.0	1.0	1.4	NA	NA	NA
RW 80	1.0	1.2	1.6	NA	NA	NA
RW 81	1.0	1.2	NA	NA	NA	NA

Environment Factor - π_E

Environment	π_E
G_B	1.0
G_F	2.0
G_M	10
N_S	5.0
N_U	16
A_{IC}	4.0
A_{IF}	8.0
A_{UC}	9.0
A_{UF}	18
A_{RW}	23
S_F	.30
M_F	13
M_L	34
C_L	610

9.7 RESISTORS, FIXED, WIREWOUND, POWER, CHASSIS MOUNTED

SPECIFICATION	STYLE	DESCRIPTION
MIL-R-39009	RER	Fixed, Wirewound, Power Type, Chassis Mounted, Established Reliability
MIL-R-18546	RE	Fixed, Wirewound, Power Type, Chassis Mounted

$$\lambda_p = \lambda_b \pi_R \pi_Q \pi_E \text{ Failures}/10^6 \text{ Hours}$$

Base Failure Rate - λ_b

T_A (°C)	Stress .1	.3	.5	.7	.9
0	.0021	.0032	.0049	.0076	.012
10	.0023	.0036	.0056	.0087	.014
20	.0025	.0040	.0064	.0100	.016
30	.0028	.0045	.0072	.012	.019
40	.0031	.0050	.0082	.013	.022
50	.0034	.0056	.0093	.016	.026
60	.0037	.0063	.011	.018	
70	.0041	.0070	.012	.021	
80	.0045	.0079	.014	.024	
90	.0050	.0088	.016	.028	
100	.0055	.0098	.018	.032	
110	.0060	.011	.020		
120	.0066	.012	.023		
130	.0073	.014	.026		
140	.0081	.015	.030		
150	.0089	.017	.034		
160	.0098	.019			
170	.011	.022			
180	.012	.024			
190	.013	.027			
200	.014	.030			
210	.016				
220	.017				
230	.019				
240	.021				
250	.023				

$$\lambda_b = .00015 \exp\left(2.64\left(\frac{T+273}{298}\right)\right)\exp\left(\frac{S}{.466}\left(\frac{T+273}{273}\right)\right)$$

T = Ambient Temperature (°C)

S = Ratio of Operating Power to Rated Power

Resistance Factor - π_R

(Characteristic G (Inductive Winding) of MIL-R-18546 and Inductively Wound Styles of MIL-R-39009)

Style	Rated Power (W)	Resistance Range (ohms) Up to 500	>500 to 1K	>1K to 5K	>5K to 10K	>10K to 20K	20K
RE 60 RER60	5	1.0	1.2	1.2	1.6	NA	NA
RE 65 RER65	10	1.0	1.0	1.2	1.6	NA	NA
RE 70 RER70	20	1.0	1.0	1.2	1.2	1.6	NA
RE 75 RER75	30	1.0	1.0	1.0	1.1	1.2	1.6
RE 77	75	1.0	1.0	1.0	1.0	1.2	1.6
RE 80	120	1.0	1.0	1.0	1.0	1.2	1.6

Resistance Factor - π_R

(Characteristic N (Noninductive Winding) of MIL-R-18546 and Noninductively Wound Styles of MIL-R-39009)

Style	Rated Power (W)	Resistance Range (ohms) Up to 500	>500 to 1K	>1K to 5K	>5K to 10K	>10K to 20K	20K
RE 60 RER40	5	1.0	1.2	1.6	NA	NA	NA
RE 65 RER45	10	1.0	1.2	1.6	NA	NA	NA
RE 70 RER50	20	1.0	1.0	1.2	1.6	NA	NA
RE 75 RER55	30	1.0	1.0	1.1	1.2	1.4	NA
RE 77	75	1.0	1.0	1.0	1.2	1.6	NA
RE 80	120	1.0	1.0	1.0	1.1	1.4	NA

9.7 RESISTORS, FIXED, WIREWOUND, POWER, CHASSIS MOUNTED

Quality Factor - π_Q

Quality	π_Q
S	.030
R	.10
P	.30
M	1.0
MIL-R-18546	5.0
Lower	15

Environment Factor - π_E

Environment	π_E
G_B	1.0
G_F	2.0
G_M	10
N_S	5.0
N_U	16
A_{IC}	4.0
A_{IF}	8.0
A_{UC}	9.0
A_{UF}	18
A_{RW}	23
S_F	.50
M_F	13
M_L	34
C_L	610

9.8 RESISTORS, THERMISTOR

SPECIFICATION	STYLE	DESCRIPTION
MIL-T-23648	RTH	Thermally Sensitive Resistor, Insulated, Bead, Disk and Rod Types

$$\lambda_p = \lambda_b \pi_Q \pi_E \text{ Failures}/10^6 \text{ Hours}$$

Base Failure Rate - λ_b

Type	λ_b
Bead (Styles 24, 26, 28, 30, 32, 34, 36, 38, 40)	.021
Disk (Styles 6, 8, 10)	.065
Rod (Styles 12, 14, 16, 18, 20, 22, 42)	.105

Quality Factor - π_Q

Quality	π_Q
MIL-SPEC	1
Lower	15

Environment Factor - π_E

Environment	π_E
G_B	1.0
G_F	5.0
G_M	21
N_S	11
N_U	24
A_{IC}	11
A_{IF}	30
A_{UC}	16
A_{UF}	42
A_{RW}	37
S_F	.50
M_F	20
M_L	53
C_L	950

9.9 RESISTORS, VARIABLE, WIREWOUND

SPECIFICATION	STYLE	DESCRIPTION
MIL-R-39015	RTR	Variable, Wirewound, Lead Screw Actuated, Established Reliability
MIL-R-27208	RT	Variable, Wirewound, Lead Screw Actuated

$$\lambda_p = \lambda_b \pi_{TAPS} \pi_R \pi_V \pi_Q \pi_E \text{ Failures}/10^6 \text{ Hours}$$

Base Failure Rate - λ_b

T_A (°C)	Stress .1	.3	.5	.7	.9
0	.0089	.011	.013	.016	.020
10	.0094	.012	.014	.017	.021
20	.010	.012	.015	.019	.024
30	.011	.013	.017	.021	.026
40	.012	.015	.018	.023	.029
50	.013	.016	.020	.026	.033
60	.014	.018	.023	.029	.037
70	.016	.020	.026	.033	.043
80	.018	.023	.03	.039	.050
90	.021	.027	.035	.046	.060
100	.024	.032	.042	.055	
110	.029	.038	.051		
120	.035	.047			
130	.044	.059			
140	.056				

$$\lambda_b = .0062 \exp\left(\frac{T+273}{358}\right)^5 \exp\left(S\left(\frac{T+273}{273}\right)\right)$$

T = Ambient Temperature (°C)

S = Ratio of Operating Power to Rated Power. See Section 9.16 for Calculation of S.

Resistance Factor - π_R

Resistance Range (ohms)	π_R
10 to 2K	1.0
>2K to 5K	1.4
>5K to 20K	2.0

Potentiometer Taps Factor - π_{TAPS}

N_{TAPS}	π_{TAPS}	N_{TAPS}	π_{TAPS}	N_{TAPS}	π_{TAPS}
3	1.0	13	2.7	23	5.2
4	1.1	14	2.9	24	5.5
5	1.2	15	3.1	25	5.8
6	1.4	16	3.4	26	6.1
7	1.5	17	3.6	27	6.4
8	1.7	18	3.8	28	6.7
9	1.9	19	4.1	29	7.0
10	2.1	20	4.4	30	7.4
11	2.3	21	4.6	31	7.7
12	2.5	22	4.9	32	8.0

$$\pi_{TAPS} = \frac{(N_{TAPS})^{\frac{3}{2}}}{25} + 0.792$$

N_{TAPS} = Number of Potentiometer Taps, including the Wiper and Terminations.

Voltage Factor - π_V

Applied Voltage* / Rated Voltage	π_V
0 to 0.1	1.10
>0.1 to 0.2	1.05
>0.2 to 0.6	1.00
>0.6 to 0.7	1.10
>0.7 to 0.8	1.22
>0.8 to 0.9	1.40
>0.9 to 1.0	2.00

$$^*V_{Applied} = \sqrt{RP_{Applied}}$$

R = Nominal Total Potentiometer Resistance

$P_{Applied}$ = Power Dissipation

V_{Rated} = 40 Volts for RT 26 and 27

V_{Rated} = 90 Volts for RTR 12, 22 and 24; RT 12 and 22

9.9 RESISTORS, VARIABLE, WIREWOUND

Quality Factor - π_Q

Quality	π_Q
S	.020
R	.060
P	.20
M	.60
MIL-R-27208	3.0
Lower	10

Environment Factor - π_E

Environment	π_E
G_B	1.0
G_F	2.0
G_M	12
N_S	6.0
N_U	20
A_{IC}	5.0
A_{IF}	8.0
A_{UC}	9.0
A_{UF}	15
A_{RW}	33
S_F	.50
M_F	18
M_L	48
C_L	870

9.10 RESISTORS, VARIABLE, WIREWOUND, PRECISION

SPECIFICATION	STYLE	DESCRIPTION
MIL-R-12934	RR	Variable, Wirewound, Precision

$$\lambda_p = \lambda_b \pi_{TAPS} \pi_C \pi_R \pi_V \pi_Q \pi_E \text{ Failures}/10^6 \text{ Hours}$$

Base Failure Rate - λ_b

T_A (°C)	Stress .1	.3	.5	.7	.9
0	.10	.11	.12	.13	.14
10	.11	.12	.13	.14	.15
20	.12	.13	.14	.16	.17
30	.13	.14	.16	.17	.19
40	.14	.15	.17	.20	.22
50	.15	.17	.20	.22	.26
60	.17	.19	.22	.26	.30
70	.19	.22	.26	.30	.36
80	.21	.25	.30	.36	.43
90	.24	.30	.36	.44	.54
100	.28	.35	.44	.54	
110	.33	.42	.54		
120	.40	.52			
130	.49	.65			
140	.60				

$$\lambda_b = .0735 \exp\left(1.03 \left(\frac{T+273}{358}\right)^{4.45}\right) \times \exp\left(\left(\frac{S}{2.74}\right)\left(\frac{T+273}{273}\right)^{3.51}\right)$$

T = Ambient Temperature (°C)

S = Ratio of Operating Power to Rated Power. See Section 9.16 for Calcuating S.

Construction Class Factor - π_C

Construction Class	π_C
RR0900A2A9J103*	2.0
3	1.0
4	3.0
5	1.5

* Sample type designation to show how construction class can be found. In this example the construction class is 2. Construction class should always appear in the eighth position.

Resistance Factor - π_R

Resistance Range (ohms)	π_R
100 to 10K	1.0
>10K to 20K	1.1
>20K to 50K	1.4
>50K to 100K	2.0
>100 K to 200K	2.5
>200K to 500K	3.5

Potentiometer Taps Factor - π_{TAPS}

N_{TAPS}	π_{TAPS}	N_{TAPS}	π_{TAPS}	N_{TAPS}	π_{TAPS}
3	1.0	13	2.7	23	5.2
4	1.1	14	2.9	24	5.5
5	1.2	15	3.1	25	5.8
6	1.4	16	3.4	26	6.1
7	1.5	17	3.6	27	6.4
8	1.7	18	3.8	28	6.7
9	1.9	19	4.1	29	7.0
10	2.1	20	4.4	30	7.4
11	2.3	21	4.6	31	7.7
12	2.5	22	4.9	32	8.0

$$\pi_{TAPS} = \frac{(N_{TAPS})^{\frac{3}{2}}}{25} + 0.792$$

N_{TAPS} = Number of Potentiometer Taps, including the Wiper and Terminations.

9.10 RESISTORS, VARIABLE, WIREWOUND, PRECISION

Voltage Factor - π_V

Applied Voltage* / Rated Voltage	π_V
0 to 0.1	1.10
>0.1 to 0.2	1.05
>0.2 to 0.6	1.00
>0.6 to 0.7	1.10
>0.7 to 0.8	1.22
>0.8 to 0.9	1.40
>0.9 to 1.0	2.00

$^*V_{Applied} = \sqrt{R_P P_{Applied}}$

R_P = Nominal Total Potentiometer Resistance

$P_{Applied}$ = Power Dissipation

V_{Rated} = 250 Volts for RR0900, RR1100, RR1300, RR2000, RR3000, RR3100, RR3200, RR3300, RR3400, RR3500

V_{Rated} = 423 Volts for RR3600, RR3700

V_{Rated} = 500 Volts for RR1000, RR1400, RR2100, RR3800, RR3900

Quality Factor - π_Q

Quality	π_Q
MIL-SPEC	2.5
Lower	5.0

Environment Factor - π_E

Environment	π_E
G_B	1.0
G_F	2.0
G_M	18
N_S	8.0
N_U	30
A_{IC}	8.0
A_{IF}	12
A_{UC}	13
A_{UF}	18
A_{RW}	53
S_F	.50
M_F	29
M_L	76
C_L	1400

9.11 RESISTORS, VARIABLE, WIREWOUND, SEMIPRECISION

SPECIFICATION	STYLE	DESCRIPTION
MIL-R-19	RA	Variable, Wirewound, Semiprecision (Low Operating Temperature)
MIL-R-39002	RK	Variable, Wirewound, Semiprecision

$$\lambda_p = \lambda_b \pi_{TAPS} \pi_R \pi_V \pi_Q \pi_E \text{ Failures}/10^6 \text{ Hours}$$

Base Failure Rate - λ_b

T_A (°C)	Stress .1	.3	.5	.7	.9
0	.055	.063	.072	.083	.095
10	.058	.069	.081	.095	.11
20	.063	.076	.092	.11	.13
30	.069	.086	.11	.13	.17
40	.076	.098	.13	.16	.21
50	.085	.11	.15	.20	.27
60	.096	.13	.19	.26	.37
70	.11	.16	.24	.35	.52
80	.13	.20	.31	.48	.75
90	.16	.26	.42	.69	1.1
100	.19	.34	.59	1.0	
110	.24	.45	.85		
120	.31				
130	.42				

$$\lambda_b = .0398 \exp\left(.514 \left(\frac{T+273}{313}\right)^{5.28}\right) \times \exp\left(\frac{S}{1.44}\left(\frac{T+273}{273}\right)^{4.46}\right)$$

T = Ambient Temperature (°C)

S = Ratio of Operating Power to Rated Power. See Section 9.16 for S Calculation.

NOTE: Do not use MIL-R-19 below the line. Points below are overstressed.

Resistance Factor - π_R

Resistance Range (ohms)	π_R
10 to 2K	1.0
>2K to 5K	1.4
>5K to 10K	2.0

Potentiometer Taps Factor - π_{TAPS}

N_{TAPS}	π_{TAPS}	N_{TAPS}	π_{TAPS}	N_{TAPS}	π_{TAPS}
3	1.0	13	2.7	23	5.2
4	1.1	14	2.9	24	5.5
5	1.2	15	3.1	25	5.8
6	1.4	16	3.4	26	6.1
7	1.5	17	3.6	27	6.4
8	1.7	18	3.8	28	6.7
9	1.9	19	4.1	29	7.0
10	2.1	20	4.4	30	7.4
11	2.3	21	4.6	31	7.7
12	2.5	22	4.9	32	8.0

$$\pi_{TAPS} = \frac{(N_{TAPS})^{\frac{3}{2}}}{25} + 0.792$$

N_{TAPS} = Number of Potentiometer Taps, including the Wiper and Terminations.

9.11 RESISTORS, VARIABLE, WIREWOUND, SEMIPRECISION

Voltage Factor - π_V

Applied Voltage* / Rated Voltage	π_V
0 to 0.1	1.10
>0.1 to 0.2	1.05
>0.2 to 0.6	1.00
>0.6 to 0.7	1.10
>0.7 to 0.8	1.22
>0.8 to 0.9	1.40
>0.9 to 1.0	2.00

$^*V_{Applied} = \sqrt{R_P P_{Applied}}$

R_P = Nominal Total Potentiometer Resistance

$P_{Applied}$ = Power Dissipation

V_{Rated} = 50 Volts for RA10

= 75 Volts for RA20X-XC, F

= 130 Volts for RA30X-XC, F

= 175 Volts for RA20X-XA

= 275 Volts for RK09

= 320 Volts for RA30X-XA

Environment Factor - π_E

Environment	π_E
G_B	1.0
G_F	2.0
G_M	16
N_S	7.0
N_U	28
A_{IC}	8.0
A_{IF}	12
A_{UC}	N/A
A_{UF}	N/A
A_{RW}	38
S_F	.50
M_F	N/A
M_L	N/A
C_L	N/A

Quality Factor - π_Q

Quality	π_Q
MIL-SPEC	2.0
Lower	4.0

9.12 RESISTORS, VARIABLE, WIREWOUND, POWER

SPECIFICATION	STYLE	DESCRIPTION
MIL-R-22	RP	Variable, Wirewound, Power Type

$$\lambda_p = \lambda_b \pi_{TAPS} \pi_R \pi_V \pi_C \pi_Q \pi_E \text{ Failures}/10^6 \text{ Hours}$$

Base Failure Rate - λ_b

T_A (°C)	Stress .1	.3	.5	.7	.9
0	.064	.074	.084	.097	.11
10	.067	.078	.091	.11	.12
20	.071	.084	.099	.12	.14
30	.076	.091	.11	.13	.16
40	.081	.099	.12	.15	
50	.087	.11	.14	.17	
60	.095	.12	.15		
70	.10	.14	.18		
80	.12	.15			
90	.13	.18			
100	.15				
110	.17				
120	.20				

$$\lambda_b = .0481 \exp\left(.334 \left(\frac{T+273}{298}\right)^{4.66}\right) \times \exp\left(\frac{S}{1.47}\left(\frac{T+273}{273}\right)^{2.83}\right)$$

T = Ambient Temperature (°C)

S = Ratio of Operating Power to Rated Power. See Section 9.16 for S Calculation.

Resistance Factor - π_R

Resistance Range (ohms)	π_R
1 to 2K	1.0
>2K to 5K	1.4
>5K to 10K	2.0

Potentiometer Taps Factor - π_{TAPS}

N_{TAPS}	π_{TAPS}	N_{TAPS}	π_{TAPS}	N_{TAPS}	π_{TAPS}
3	1.0	13	2.7	23	5.2
4	1.1	14	2.9	24	5.5
5	1.2	15	3.1	25	5.8
6	1.4	16	3.4	26	6.1
7	1.5	17	3.6	27	6.4
8	1.7	18	3.8	28	6.7
9	1.9	19	4.1	29	7.0
10	2.1	20	4.4	30	7.4
11	2.3	21	4.6	31	7.7
12	2.5	22	4.9	32	8.0

$$\pi_{TAPS} = \frac{(N_{TAPS})^{\frac{3}{2}}}{25} + 0.792$$

N_{TAPS} = Number of Potentiometer Taps, including the Wiper and Terminations

9.12 RESISTORS, VARIABLE, WIREWOUND, POWER

Voltage Factor - π_V

Applied Voltage* / Rated Voltage	π_V
0 to 0.1	1.10
>0.1 to 0.2	1.05
>0.2 to 0.6	1.00
>0.6 to 0.7	1.10
>0.7 to 0.8	1.22
>0.8 to 0.9	1.40
>0.9 to 1.0	2.00

$^*V_{Applied} = \sqrt{R_P P_{Applied}}$

R_P = Nominal Total Potentiometer Resistance

$P_{Applied}$ = Power Dissipation

V_{Rated} = 250 Volts for RP06, RP10

= 500 Volts for Others

Construction Class Factor - π_C

Construction Class	Style	π_C
Enclosed	RP07, RP11, RP16	2.0
Unenclosed	All Other Styles are Unenclosed	1.0

Quality Factor - π_Q

Quality	π_Q
MIL-SPEC	2.0
Lower	4.0

Environment Factor - π_E

Environment	π_E
G_B	1.0
G_F	3.0
G_M	16
N_S	7.0
N_U	28
A_{IC}	8.0
A_{IF}	12
A_{UC}	N/A
A_{UF}	N/A
A_{RW}	38
S_F	.50
M_F	N/A
M_L	N/A
C_L	N/A

9.13 RESISTORS, VARIABLE, NONWIREWOUND

SPECIFICATION	STYLE	DESCRIPTION
MIL-R-22097	RJ	Variable, Nonwirewound (Adjustment Types)
MIL-R-39035	RJR	Variable, Nonwirewound (Adjustment Types), Established Reliability

$$\lambda_p = \lambda_b \pi_{TAPS} \pi_R \pi_V \pi_Q \pi_E \text{ Failures}/10^6 \text{ Hours}$$

Base Failure Rate - λ_b

T_A (°C)	Stress .1	.3	.5	.7	.9
0	.021	.023	.024	.026	.028
10	.021	.023	.025	.027	.030
20	.022	.024	.026	.029	.031
30	.023	.025	.028	.030	.033
40	.024	.026	.029	.032	.036
50	.025	.028	.031	.035	.039
60	.026	.030	.033	.038	.043
70	.028	.032	.036	.042	.047
80	.030	.035	.040	.046	.053
90	.034	.039	.045	.053	.061
100	.038	.044	.052	.061	
110	.043	.051	.060		
120	.050	.060			
130	.060	.073			
140	.074				

$$\lambda_b = .019 \exp\left(.445 \left(\frac{T+273}{358}\right)^{7.3}\right) \times \exp\left(\frac{S}{2.69}\left(\frac{T+273}{273}\right)^{2.46}\right)$$

T = Ambient Temperature (°C)

S = Ratio of Operating Power to Rated Power. See Section 9.16 for S Calculation.

Resistance Factor - π_R

Resistance Range (ohms)	π_R
10 to 50K	1.0
>50K to 100K	1.1
>100K to 200K	1.2
>200K to 500K	1.4
>500K to 1M	1.8

Potentiometer Taps Factor - π_{TAPS}

N_{TAPS}	π_{TAPS}	N_{TAPS}	π_{TAPS}	N_{TAPS}	π_{TAPS}
3	1.0	13	2.7	23	5.2
4	1.1	14	2.9	24	5.5
5	1.2	15	3.1	25	5.8
6	1.4	16	3.4	26	6.1
7	1.5	17	3.6	27	6.4
8	1.7	18	3.8	28	6.7
9	1.9	19	4.1	29	7.0
10	2.1	20	4.4	30	7.4
11	2.3	21	4.6	31	7.7
12	2.5	22	4.9	32	8.0

$$\pi_{TAPS} = \frac{(N_{TAPS})^{\frac{3}{2}}}{25} + 0.792$$

N_{TAPS} = Number of Potentiometer Taps, including the Wiper and Terminations.

9.13 RESISTORS, VARIABLE, NONWIREWOUND

Voltage Factor - π_V

Applied Voltage* / Rated Voltage	π_V
0 to 0.8	1.00
>0.8 to 0.9	1.05
>0.9 to 1.0	1.20

$^*V_{Applied} = \sqrt{R_P P_{Applied}}$

R_P = Nominal Total Potentiometer Resistance

$P_{Applied}$ = Power Dissipation

V_{Rated} = 200 Volts for RJ and RJR26; RJ and RJR50

= 300 Volts for All Others

Environment Factor - π_E

Environment	π_E
G_B	1.0
G_F	3.0
G_M	14
N_S	6.0
N_U	24
A_{IC}	5.0
A_{IF}	7.0
A_{UC}	12
A_{UF}	18
A_{RW}	39
S_F	.50
M_F	22
M_L	57
C_L	1000

Quality Factor - π_Q

Quality	π_Q
S	.020
R	.060
P	.20
M	.60
MIL-R-22097	3.0
Lower	10

9.14 RESISTORS, VARIABLE, COMPOSITION

SPECIFICATION	STYLE	DESCRIPTION
MIL-R-94	RV	Variable, Composition, Low Precision

$$\lambda_p = \lambda_b \pi_{TAPS} \pi_R \pi_V \pi_Q \pi_E \text{ Failures}/10^6 \text{ Hours}$$

Base Failure Rate - λ_b

T_A (°C)	Stress .1	.3	.5	.7	.9
0	.027	.030	.032	.035	.038
10	.028	.031	.034	.038	.042
20	.029	.033	.037	.042	.048
30	.031	.036	.041	.048	.056
40	.033	.039	.047	.056	.067
50	.036	.044	.054	.067	.082
60	.039	.050	.065	.083	.11
70	.045	.060	.08	.11	.14
80	.053	.074	.10	.15	
90	.065	.096	.14		
100	.084	.13			
110	.11				

$$\lambda_b = .0246 \exp\left(.459 \left(\frac{T+273}{343}\right)^{9.3}\right) \times \exp\left(\frac{S}{2.32}\left(\frac{T+273}{273}\right)^{5.3}\right)$$

T = Ambient Temperature (°C)

S = Ratio of Operating Power to Rated Power. See Section 9.16 for S Calculation.

Resistance Factor - π_R

Resistance Range (ohms)	π_R
50 to 50K	1.0
>50K to 100K	1.1
>100K to 200K	1.2
>200K to 500K	1.4
>500K to 1M	1.8

Potentiometer Taps Factor - π_{TAPS}

N_{TAPS}	π_{TAPS}	N_{TAPS}	π_{TAPS}	N_{TAPS}	π_{TAPS}
3	1.0	13	2.7	23	5.2
4	1.1	14	2.9	24	5.5
5	1.2	15	3.1	25	5.8
6	1.4	16	3.4	26	6.1
7	1.5	17	3.6	27	6.4
8	1.7	18	3.8	28	6.7
9	1.9	19	4.1	29	7.0
10	2.1	20	4.4	30	7.4
11	2.3	21	4.6	31	7.7
12	2.5	22	4.9	32	8.0

$$\pi_{TAPS} = \frac{(N_{TAPS})^{\frac{3}{2}}}{25} + 0.792$$

N_{TAPS} = Number of Potentiometer Taps, including the Wiper and Terminations.

9.14 RESISTORS, VARIABLE, COMPOSITION

Voltage Factor - π_V

Applied Voltage* / Rated Voltage	π_V
0 to 0.8	1.00
>0.8 to 0.9	1.05
>0.9 to 1.0	1.20

$^*V_{Applied} = \sqrt{R_P P_{Applied}}$

R_P = Nominal Total Potentiometer Resistance

$P_{Applied}$ = Power Dissipation

V_{Rated} = 500 Volts for RV4X--XA&XB

= 500 Volts for 2RV7X--XA&XB

= 350 Volts for RV2X--XA&XB

= 350 Volts for RV4X--XA&XB

= 350 Volts for RV5X--XA&XB

= 350 Volts for RV6X--XA&XB

= 250 Volts for RV1X--XA&XB

= 200 Volts for All Other Types

Environment Factor - π_E

Environment	π_E
G_B	1.0
G_F	2.0
G_M	19
N_S	8.0
N_U	29
A_{IC}	40
A_{IF}	65
A_{UC}	48
A_{UF}	78
A_{RW}	46
S_F	.50
M_F	25
M_L	66
C_L	1200

Quality Factor - π_Q

Quality	π_Q
MIL-SPEC	2.5
Lower	5.0

9.15 RESISTORS, VARIABLE, NONWIREWOUND, FILM AND PRECISION

SPECIFICATION	STYLE	DESCRIPTION
MIL-R-39023	RQ	Variable, Nonwirewound, Film, Precision
MIL-R-23285	RVC	Variable, Nonwirewound, Film

$$\lambda_p = \lambda_b \pi_{TAPS} \pi_R \pi_V \pi_Q \pi_E \text{ Failures}/10^6 \text{ Hours}$$

Base Failure Rate - λ_b
(RQ Style Only)

T_A (°C)	Stress .1	.3	.5	.7	.9
0	.023	.024	.026	.028	.031
10	.024	.026	.029	.031	.034
20	.026	.029	.032	.035	.039
30	.028	.032	.036	.040	.045
40	.032	.036	.041	.047	.053
50	.037	.042	.049	.057	.065
60	.044	.051	.060	.070	.083
70	.053	.064	.076	.091	.11
80	.068	.083	.10	.12	
90	.092	.11	.14		
100	.13	.17			
110	.20				

$$\lambda_b = .018 \exp\left(\frac{T+273}{343}\right)^{7.4} \times \exp\left(\left(\frac{S}{2.55}\right)\left(\frac{T+273}{273}\right)^{3.6}\right)$$

T = Ambient Temperature (°C)

S = Ratio of Operating Power to Rated Power. See Section 9.16 for S Calculation.

Resistance Factor - π_R

Resistance Range (Ohms)	π_R
Up to 10K	1.0
>10K to 50K	1.1
>50K to 200K	1.2
>200K to 1M	1.4
>1M	1.8

Base Failure Rate - λ_b
(RVC Style Only)

T_A (°C)	Stress .1	.3	.5	.7	.9
0	.028	.031	.033	.036	.039
10	.029	.032	.035	.038	.042
20	.030	.033	.037	.041	.046
30	.031	.035	.040	.045	.051
40	.032	.037	.043	.050	.058
50	.034	.040	.047	.056	.066
60	.036	.044	.053	.064	.078
70	.039	.049	.060	.075	.093
80	.043	.055	.070	.09	.11
90	.048	.063	.083	.11	.15
100	.055	.075	.10	.14	.19
110	.064	.091	.13	.18	.26
120	.077	.11	.17	.25	.37
130	.096	.15	.23	.36	.55
140	.12	.20	.33	.53	
150	.17	.29	.50		
160	.24	.44			
170	.37				

$$\lambda_b = .0257 \exp\left(\frac{T+273}{398}\right)^{7.9} \times \exp\left(\left(\frac{S}{2.45}\right)\left(\frac{T+273}{273}\right)^{4.3}\right)$$

T = Ambient Temperature (°C)

S = Ratio of Operating Power to Rated Power. See Section 9.16 for S Calculation.

9.15 RESISTORS, VARIABLE, NONWIREWOUND, FILM AND PRECISION

Potentiometer Taps Factor - π_{TAPS}

N_{TAPS}	π_{TAPS}	N_{TAPS}	π_{TAPS}	N_{TAPS}	π_{TAPS}
3	1.0	13	2.7	23	5.2
4	1.1	14	2.9	24	5.5
5	1.2	15	3.1	25	5.8
6	1.4	16	3.4	26	6.1
7	1.5	17	3.6	27	6.4
8	1.7	18	3.8	28	6.7
9	1.9	19	4.1	29	7.0
10	2.1	20	4.4	30	7.4
11	2.3	21	4.6	31	7.7
12	2.5	22	4.9	32	8.0

$$\pi_{TAPS} = \frac{(N_{TAPS})^{\frac{3}{2}}}{25} + 0.792$$

N_{TAPS} = Number of Potentiometer Taps, including the Wiper and Terminations.

Voltage Factor - π_V

Applied Voltage* / Rated Voltage	π_V
0 to 0.8	1.00
>0.8 to 0.9	1.05
>0.9 to 1.0	1.20

$^*V_{Applied} = \sqrt{R_P P_{Applied}}$

R_P = Nominal Total Potentiometer Resistance

$P_{Applied}$ = Power Dissipation

V_{Rated} = 250 Volts for RQ090, 110, 150, 200, 300

= 500 Volts for RQ100, 160, 210

= 350 Volts for RVC5, 6

Quality Factor - π_Q

Quality	π_Q
MIL-SPEC	2
Lower	4

Environment Factor - π_E

Environment	π_E
G_B	1.0
G_F	3.0
G_M	14
N_S	7.0
N_U	24
A_{IC}	6.0
A_{IF}	12
A_{UC}	20
A_{UF}	30
A_{RW}	39
S_F	.50
M_F	22
M_L	57
C_L	1000

9.16 CALCULATION OF STRESS RATIO FOR POTENTIOMETERS

Stress Ratio (S) Calculation for Rheostats

$$S = \frac{(I_{opmax})^2}{\pi_{GANGED}(I_{max_{rated}})^2}$$

I_{opmax} = Maximum current which will be passed through the rheostat in the circuit.

$I_{max_{rated}}$ = Current rating of the potentiometer. If current rating is not given, use:

$$I_{max_{rated}} = \sqrt{P_{rated}/R_P}$$

P_{rated} = Power Rating of Potentiometer

R_P = Nominal Total Potentiometer Resistance

π_{GANGED} = Factor to correct for the reduction in effective rating of the potentiometer due to the close proximity of two or more potentiometers when they are ganged together on a common shaft. See below.

Stress Ratio (S) Calculation for Potentiometers Connected Conventionally

$$S = \frac{P_{APPLIED}}{\pi_{EFF} \times \pi_{GANGED} \times P_{RATED}}$$

$P_{Applied}$ = Equivalent power input to the potentiometer when it is not loaded (i.e., wiper lead disconnected). Calculate as follows:

$$P_{Applied} = \frac{V_{in}^2}{R_P}$$

V_{in} = Input Voltage

R_P = Nominal Total Potentiometer Resistance

P_{RATED} = Power Rating of Potentiometer

π_{GANGED} = Factor to correct for the reduction in effective rating of the potentiometer due to the close proximity of two or more potentiometers when they are ganged together on a common shaft. See below.

π_{EFF} = Correction factor for the electrical loading effect on the wiper contact of the potentiometer. Its value is a function of the type of potentiometer, its resistance, and the load resistance. See next page.

Ganged-Potentiometer Factor - π_{GANGED}

Number of Sections	First Potentiometer Next to Mount	Second in Gang	Third in Gang	Fourth in Gang	Fifth in Gang	Sixth in Gang
Single	1.0	Not Applicable				
Two	0.75	0.60	Not Applicable			
Three	0.75	0.50	0.60	Not Applicable		
Four	0.75	0.50	0.50	0.60	Not Applicable	
Five	0.75	0.50	0.40	0.50	0.60	Not Applicable
Six	0.75	0.50	0.40	0.40	0.50	0.60

9.16 CALCULATION OF STRESS RATIO FOR POTENTIOMETERS

Loaded Potentiometer Derating Factor - π_{EFF}

R_L/R_P	K_H 0.2	0.3	0.5	1.0
0.1	.04	.03	.02	.01
0.2	.13	.09	.05	.03
0.3	.22	.16	.10	.05
0.4	.31	.23	.15	.08
0.5	.38	.29	.20	.11
0.6	.45	.35	.25	.14
0.7	.51	.40	.29	.17
0.8	.55	.45	.33	.20
0.9	.59	.49	.37	.22
1.0	.63	.53	.40	.25
1.5	.74	.65	.53	.36
2.0	.80	.73	.62	.44
3.0	.87	.81	.72	.56
4.0	.90	.86	.78	.64
5.0	.92	.88	.82	.69
10.0	.96	.94	.90	.83
100.0	1.00	.99	.99	.98

$$\pi_{EFF} = \frac{R_L^2}{R_L^2 + K_H\left(R_P^2 + 2R_PR_L\right)}$$

R_L = Load resistance (If R_L is variable, use lowest value). R_L is the total resistance between the wiper arm and one end of the potentiometer.

R_P = Nominal Total Potentiometer Resistance

K_H = Style Constant. See K_H Table.

Style Constant - K_H

Potentiometer MIL-SPEC	Style Type	K_H
MIL-R-19	RA	0.5
MIL-R-22	RP	1.0
MIL-R-94	RV	0.5
MIL-R-12934	RR1000, 1001, 1003, 1400, 2100, 2101, 2102, 2103	0.3
MIL-R-12934	All Other Types	0.2
MIL-R-22097	RJ11, RJ12	0.3
MIL-R-22097	All Other Types	0.2
MIL-R-23285	RVC	0.5
MIL-R-27208	RT22, 24, 26, 27	0.2
MIL-R-27208	All Other Types	0.3
MIL-R-39002	RK	0.5
MIL-R-39015	RTR 22, 24	0.2
MIL-R-39015	RTR12	0.3
MIL-R-39023	RQ	0.3
MIL-R-39035	RJR	0.3

Example

Given: Type RV1SAYSA505A variable 500K ohm resistor procured per MIL-R-94, rated at 0.2 watts is being used in a fixed ground environment. The resistor ambient temperature is 40°C and is dissipating 0.06 watts. The resistance connected to the wiper contact varies between 1 megohm and 3 megohms. The potentiometer is connected conventionally without ganging.

The appropriate model for RV style variable resistors is given in Section 9.14. Based on the given information the following model factors are determined from the tables shown in Section 9.14 and by following the procedure for determining electrical stress for potentiometers as described in Section 9.16.

From Section 9.16

$P_{APPLIED}$ = .06W

π_{EFF} = .62 — K_H = .5 for MIL-R-94 (Section 9.16 Table)

π_{GANGED} = 1.0 — Not Ganged (Section 9.16 Table, Single Section, First Potentiometer)

π_{RATED} = .2W

$$S = \frac{P_{APPLIED}}{\pi_{EFF} \times \pi_{GANGED} \times \pi_{RATED}} = \frac{.06}{(.62)(1.0)(.2)} = .48$$

From Section 9.14

λ_b = .047 — T_A = 40°C, S Rounded to .5

π_R = 1.4 — 500K ohms

π_{TAPS} = 1.0 — 3 Taps, Basic Single Potentiometer

π_V = 1.0 — V_{RATED} = 250 Volts for RV1 prefix

$V_{APPLIED} = \sqrt{(500{,}000)(.06)} = 173$ volts

$V_{APPLIED}/V_{RATED} = \frac{173}{250} = .69$

π_Q = 2.5

π_E = 2.0

$$\lambda_p = \lambda_b \pi_{TAPS} \pi_R \pi_V \pi_Q \pi_E$$

$$= (.047)(1.0)(1.4)(1.0)(2.5)(2.0) = .33 \text{ Failures}/10^6 \text{ Hours}$$

10.1 CAPACITORS, FIXED, PAPER, BY-PASS

SPECIFICATION	STYLE	DESCRIPTION
MIL-C-25	CP	Paper, By-pass, Filter, Blocking, DC
MIL-C-12889	CA	Paper, By-pass, Radio Interference Reduction AC and DC

$$\lambda_p = \lambda_b \pi_{CV} \pi_Q \pi_E \text{ Failures}/10^6 \text{ Hours}$$

Base Failure Rate - λ_b
(T = 85°C Max Rated)
(All MIL-C-12889; MIL-C-25 Styles CP25, 26, 27, 28, 29, 40, 41, 67, 69, 70, 72, 75, 76, 77, 78, 80, 81, 82; Characteristics E, F)

T_A (°C)	Stress .1	.3	.5	.7	.9
0	.00088	.0011	.0036	.015	.051
10	.00089	.0011	.0036	.016	.052
20	.00092	.0011	.0037	.016	.054
30	.00097	.0012	.0039	.017	.057
40	.0011	.0013	.0044	.019	.063
50	.0013	.0016	.0052	.022	.075
60	.0017	.0021	.0069	.030	.10
70	.0027	.0034	.011	.048	.16
80	.0060	.0074	.024	.10	.35

$$\lambda_b = .00086\left[\left(\frac{S}{.4}\right)^5 + 1\right]\exp\left(2.5\left(\frac{T+273}{358}\right)^{18}\right)$$

T = Ambient Temperature (°C)

S = Ratio of Operating to Rated Voltage

Operating voltage is the sum of applied D.C. voltage and peak A.C. voltage.

Base Failure Rate - λ_b
(T = 125°C Max Rated)
(MIL-C-25 Styles CP 4, 5, 8, 9, 10, 11, 12 13; Characteristic K)

T_A (°C)	Stress .1	.3	.5	.7	.9
0	.00086	.0011	.0035	.015	.051
10	.00087	.0011	.0035	.015	.051
20	.00087	.0011	.0035	.015	.051
30	.00088	.0011	.0035	.015	.051
40	.00089	.0011	.0036	.015	.052
50	.00091	.0011	.0037	.016	.053
60	.00095	.0012	.0039	.017	.056
70	.0010	.0013	.0041	.018	.060
80	.0011	.0014	.0046	.020	.067
90	.0014	.0017	.0056	.024	.081
100	.0019	.0023	.0076	.033	.11
110	.0030	.0037	.012	.052	.18
120	.0063	.0078	.026	.11	.37

$$\lambda_b = .00086\left[\left(\frac{S}{.4}\right)^5 + 1\right]\exp\left(2.5\left(\frac{T+273}{398}\right)^{18}\right)$$

T = Ambient Temperature (°C)

S = Ratio of Operating to Rated Voltage

Operating voltage is the sum of applied D.C. voltage and peak A.C. voltage.

10.1 CAPACITORS, FIXED, PAPER, BY-PASS

Capacitance Factor - π_{CV}

Capacitance, C (μF)	π_{CV}
MIL-C-25*	
.0034	0.7
.15	1.0
2.3	1.3
16.	1.6
MIL-C-12889	
All	1.0

* $\pi_{CV} = 1.2C^{.095}$

Quality Factor - π_Q

Quality	π_Q
MIL-SPEC	3.0
Lower	7.0

Environment Factor - π_E

Environment	π_E
G_B	1.0
G_F	2.0
G_M	9.0
N_S	5.0
N_U	15
A_{IC}	6.0
A_{IF}	8.0
A_{UC}	17
A_{UF}	32
A_{RW}	22
S_F	.50
M_F	12
M_L	32
C_L	570

10.2 CAPACITORS, FIXED, PAPER, FEED-THROUGH

SPECIFICATION
MIL-C-11693

STYLE
CZR and CZ

DESCRIPTION
Paper, Metallized Paper, Metallized Plastic, RFI Feed-Through Established Reliability and Non-Established Reliability

$$\lambda_p = \lambda_b \pi_{CV} \pi_Q \pi_E \text{ Failures}/10^6 \text{ Hours}$$

Base Failure Rate - λ_b
(T = 85°C Max Rated)
(Characteristics E, W)

T_A (°C)	Stress .1	.3	.5	.7	.9
0	.0012	.0014	.0047	.020	.069
10	.0012	.0015	.0048	.021	.070
20	.0012	.0015	.0050	.021	.072
30	.0013	.0016	.0053	.023	.076
40	.0014	.0018	.0058	.025	.084
50	.0017	.0021	.0069	.030	.10
60	.0023	.0028	.0092	.039	.13
70	.0037	.0045	.015	.064	.21
80	.0080	.0099	.032	.14	.47

$$\lambda_b = .00115\left[\left(\frac{S}{.4}\right)^5 + 1\right]\exp\left(2.5\left(\frac{T+273}{358}\right)^{18}\right)$$

T = Ambient Temperature (°C)
S = Ratio of Operating to Rated Voltage

Operating voltage is the sum of applied D.C. voltage and peak A.C. voltage.

Base Failure Rate - λ_b
(T = 125°C Max Rated)
(Characteristic K)

T_A (°C)	Stress .1	.3	.5	.7	.9
0	.0012	.0014	.0047	.020	.068
10	.0012	.0014	.0047	.020	.068
20	.0012	.0014	.0047	.020	.068
30	.0012	.0014	.0047	.020	.069
40	.0012	.0015	.0048	.021	.070
50	.0012	.0015	.0049	.021	.072
60	.0013	.0016	.0052	.022	.075
70	.0014	.0017	.0055	.024	.08
80	.0015	.0019	.0062	.027	.09
90	.0019	.0023	.0075	.032	.11
100	.0025	.0031	.010	.044	.15
110	.0040	.005	.016	.07	.24
120	.0084	.010	.034	.15	.49

$$\lambda_b = .00115\left[\left(\frac{S}{.4}\right)^5 + 1\right]\exp\left(2.5\left(\frac{T+273}{398}\right)^{18}\right)$$

T = Ambient Temperature (°C)
S = Ratio of Operating to Rated Voltage

Operating voltage is the sum of applied D.C. voltage and peak A.C. voltage.

Base Failure Rate - λ_b
(T = 150°C Max Rated)
(Characteristic P)

T_A (°C)	Stress .1	.3	.5	.7	.9
0	.0012	.0014	.0047	.020	.068
10	.0012	.0014	.0047	.020	.068
20	.0012	.0014	.0047	.020	.068
30	.0012	.0014	.0047	.020	.068
40	.0012	.0014	.0047	.020	.068
50	.0012	.0015	.0048	.020	.069
60	.0012	.0015	.0048	.021	.070
70	.0012	.0015	.0049	.021	.071
80	.0013	.0016	.0051	.022	.074
90	.0013	.0017	.0055	.023	.079
100	.0015	.0018	.0060	.026	.087
110	.0017	.0022	.0071	.03	.10
120	.0022	.0028	.0091	.039	.13
130	.0033	.0040	.013	.057	.19
140	.0058	.0072	.024	.10	.34
150	.014	.017	.057	.24	.82

$$\lambda_b = .00115\left[\left(\frac{S}{.4}\right)^5 + 1\right]\exp\left(2.5\left(\frac{T+273}{423}\right)^{18}\right)$$

T = Ambient Temperature (°C)

S = Ratio of Operating to Rated Voltage

Operating voltage is the sum of applied D.C. voltage and peak A.C. voltage.

10.2 CAPACITORS, FIXED, PAPER, FEED-THROUGH

Capacitance Factor - π_{CV}

Capacitance, C (μF)	π_{CV}
0.0031	.70
0.061	1.0
1.8	1.5
$\pi_{CV} = 1.4C^{0.12}$	

Quality Factor - π_Q

Quality	π_Q
M	1.0
Non-Established Reliability	3.0
Lower	10

Environment Factor - π_E

Environment	π_E
G_B	1.0
G_F	2.0
G_M	9.0
N_S	7.0
N_U	15
A_{IC}	6.0
A_{IF}	8.0
A_{UC}	17
A_{UF}	28
A_{RW}	22
S_F	.50
M_F	12
M_L	32
C_L	570

10.3 CAPACITORS, FIXED, PAPER AND PLASTIC FILM

SPECIFICATION	STYLE	DESCRIPTION
MIL-C-14157	CPV	Paper and Plastic Film, Est. Rel.
MIL-C-19978	CQR and CQ	Paper and Plastic Film, Est. Rel. and Non-Est. Rel.

$$\lambda_p = \lambda_b \pi_{CV} \pi_Q \pi_E \text{ Failures}/10^6 \text{ Hours}$$

Base Failure Rate - λ_b
(T = 65°C Max Rated)
(MIL-C-14157 Style CPV07;
MIL-C-19978 Characteristics P, L)

T_A (°C)	Stress .1	.3	.5	.7	.9
0	.00053	.00065	.0021	.0092	.031
10	.00055	.00069	.0022	.0096	.032
20	.00061	.00075	.0025	.011	.036
30	.00071	.00088	.0029	.012	.042
40	.00094	.0012	.0038	.016	.055
50	.0015	.0019	.0061	.026	.088
60	.0034	.0042	.014	.059	.20

$$\lambda_b = .0005\left[\left(\frac{S}{.4}\right)^5 + 1\right]\exp\left(2.5\left(\frac{T+273}{338}\right)^{18}\right)$$

T = Ambient Temperature (°C)
S = Ratio of Operating to Rated Voltage
Operating voltage is the sum of applied D.C. voltage and peak A.C. voltage.

Base Failure Rate - λ_b
(T = 85°C Max Rated)
(MIL-C-14157 Style CPV17;
MIL-C-19978 Characteristics E, F, G, M)

T_A (°C)	Stress .1	.3	.5	.7	.9
0	.00051	.00063	.0021	.0089	.030
10	.00052	.00064	.0021	.0090	.030
20	.00054	.00066	.0022	.0093	.031
30	.00057	.00070	.0023	.0099	.033
40	.00063	.00077	.0025	.011	.037
50	.00074	.00092	.0030	.013	.043
60	.00099	.0012	.0040	.017	.058
70	.0016	.0020	.0064	.028	.093
80	.0035	.0043	.014	.061	.20

$$\lambda_b = .0005\left[\left(\frac{S}{.4}\right)^5 + 1\right]\exp\left(2.5\left(\frac{T+273}{358}\right)^{18}\right)$$

T = Ambient Temperature (°C)
S = Ratio of Operating to Rated Voltage
Operating voltage is the sum of applied D.C. voltage and peak A.C. voltage.

Base Failure Rate - λ_b
(T = 125°C Max Rated)
(MIL-C-14157 Style CPV09 and MIL-C-19978
Characteristics K, Q, S)

T_A (°C)	Stress .1	.3	.5	.7	.9
0	.00050	.00062	.0020	.0087	.029
10	.00050	.00062	.0020	.0088	.029
20	.00051	.00062	.0020	.0088	.030
30	.00051	.00063	.0021	.0089	.030
40	.00052	.00064	.0021	.009	.030
50	.00053	.00066	.0021	.0092	.031
60	.00055	.00068	.0022	.0096	.032
70	.00059	.00073	.0024	.010	.035
80	.00067	.00083	.0027	.012	.039
90	.00081	.0010	.0033	.014	.047
100	.0011	.0013	.0044	.019	.064
110	.0018	.0022	.0071	.030	.10
120	.0037	.0045	.015	.064	.21

$$\lambda_b = .0005\left[\left(\frac{S}{.4}\right)^5 + 1\right]\exp\left(2.5\left(\frac{T+273}{398}\right)^{18}\right)$$

T = Ambient Temperature (°C)
S = Ratio of Operating to Rated Voltage
Operating voltage is the sum of applied D.C. voltage and peak A.C. voltage.

Base Failure Rate - λ_b
(T = 170°C Max Rated)
(MIL-C-19978 Characteristic T)

T_A (°C)	Stress .1	.3	.5	.7	.9
0	.00050	.00062	.0020	.0087	.029
10	.00050	.00062	.0020	.0087	.029
20	.00050	.00062	.0020	.0087	.029
30	.00050	.00062	.0020	.0087	.029
40	.00050	.00062	.0020	.0087	.029
50	.00050	.00062	.0020	.0088	.030
60	.00051	.00063	.0021	.0088	.030
70	.00051	.00063	.0021	.0089	.030
80	.00052	.00065	.0021	.0091	.031
90	.00054	.00066	.0022	.0093	.031
100	.00056	.00069	.0023	.0097	.033
110	.00060	.00074	.0024	.010	.035
120	.00067	.00083	.0027	.012	.039
130	.00079	.00098	.0032	.014	.046
140	.0010	.0013	.0041	.018	.060
150	.0015	.0018	.006	.026	.087
160	.0026	.0032	.011	.046	.15
170	.0061	.0075	.025	.11	.36

$$\lambda_b = .0005\left[\left(\frac{S}{.4}\right)^5 + 1\right]\exp\left(2.5\left(\frac{T+273}{443}\right)^{18}\right)$$

T = Ambient Temperature (°C)
S = Ratio of Operating to Rated Voltage
Operating voltage is the sum of applied D.C. voltage and peak A.C. voltage.

10.3 CAPACITORS, FIXED, PAPER AND PLASTIC FILM

Capacitance Factor - π_{CV}

Capacitance, C (μF)	π_{CV}
MIL-C-14157: *	
.0017	.70
.027	1.0
.20	1.3
1.0	1.6
MIL-C-19978: **	
.00032	.70
.033	1.0
1.0	1.3
15.0	1.6

* $\pi_{CV} = 1.6C^{0.13}$

** $\pi_{CV} = 1.3C^{0.077}$

Environment Factor - π_E

Environment	π_E
G_B	1.0
G_F	2.0
G_M	8.0
N_S	5.0
N_U	14
A_{IC}	4.0
A_{IF}	6.0
A_{UC}	11.0
A_{UF}	20
A_{RW}	20
S_F	.50
M_F	11
M_L	29
C_L	530

Quality Factor - π_Q

Quality	π_Q
S	.03
R	.10
P	.30
M	1.0
L	3.0
MIL-C-19978, Non-Est. Rel.	10
Lower	30

10.4 CAPACITORS, FIXED, METALLIZED PAPER, PAPER-PLASTIC AND PLASTIC

SPECIFICATION	STYLE	DESCRIPTION
MIL-C-18312	CH	Metallized Paper , Paper-Plastic, Plastic
MIL-C-39022	CHR	Metallized Paper, Paper-Plastic, Plastic, Established Reliability

$$\lambda_p = \lambda_b \pi_{CV} \pi_Q \pi_E \text{ Failures}/10^6 \text{ Hours}$$

Base Failure Rate - λ_b

(T = 85°C Max Rated)
(MIL-C-39022 Characteristic 9 and 12 (50 Volts rated), Characteristic 49; and MIL-C-18312 Characteristic R)

T_A (°C)	Stress .1	.3	.5	.7	.9
0	.00070	.00087	.0029	.012	.041
10	.00072	.00089	.0029	.012	.042
20	.00074	.00091	.0030	.013	.043
30	.00078	.00097	.0032	.014	.046
40	.00086	.0011	.0035	.015	.051
50	.0010	.0013	.0041	.018	.06
60	.0014	.0017	.0055	.024	.08
70	.0022	.0027	.0089	.038	.13
80	.0048	.0059	.019	.084	.28

$$\lambda_b = .00069\left[\left(\frac{S}{.4}\right)^5 + 1\right]\exp\left(2.5\left(\frac{T+273}{358}\right)^{18}\right)$$

T = Ambient Temperature (°C)

S = Ratio of Operating to Rated Voltage

Operating voltage is the sum of applied D.C. voltage and peak A.C. voltage.

Base Failure Rate - λ_b

(T = 125°C Max Rated)
(MIL-C-39022 Characteristic 9 and 12 (above 50 Volts rated), Characteristics 1, 10, 19, 29, 59; and MIL-C-18312 Characteristic N)

T_A (°C)	Stress .1	.3	.5	.7	.9
0	.00069	.00086	.0028	.012	.041
10	.00069	.00086	.0028	.012	.041
20	.00070	.00086	.0028	.012	.041
30	.00070	.00087	.0028	.012	.041
40	.00071	.00088	.0029	.012	.042
50	.00073	.00090	.003.	.013	.043
60	.00076	.00094	.0031	.013	.045
70	.00082	.0010	.0033	.014	.048
80	.00092	.0011	.0037	.016	.054
90	.0011	.0014	.0045	.019	.065
100	.0015	.0019	.0061	.026	.088
110	.0024	.0030	.0098	.042	.14
120	.0051	.0063	.020	.088	.30

$$\lambda_b = .00069\left[\left(\frac{S}{.4}\right)^5 + 1\right]\exp\left(2.5\left(\frac{T+273}{398}\right)^{18}\right)$$

T = Ambient Temperature (°C)

S = Ratio of Operating to Rated Voltage

Operating voltage is the sum of applied D.C. voltage and peak A.C. voltage.

10.4 CAPACITORS, FIXED, METALLIZED PAPER, PAPER-PLASTIC AND PLASTIC

Capacitance Factor - π_{CV}

Capacitance, C (µF)	π_{CV}
0.0029	.70
0.14	1.0
2.4	1.3
$\pi_{CV} = 1.2C^{0.092}$	

Quality Factor - π_Q

Quality	π_Q
S	0.03
R	.10
P	.30
M	1.0
L	3.0
MIL-C-18312, Non-Est. Rel.	7.0
Lower	20

Environment Factor - π_E

Environment	π_E
G_B	1.0
G_F	2.0
G_M	8.0
N_S	5.0
N_U	14
A_{IC}	4.0
A_{IF}	6.0
A_{UC}	11.0
A_{UF}	20
A_{RW}	20
S_F	.50
M_F	11
M_L	29
C_L	530

10.5 CAPACITORS, FIXED, PLASTIC AND METALLIZED PLASTIC

SPECIFICATION	STYLE	DESCRIPTION
MIL-C-55514	CFR	Plastic, Metallized Plastic, Est. Rel.

$$\lambda_p = \lambda_b \pi_{CV} \pi_Q \pi_E \text{ Failures}/10^6 \text{ Hours}$$

Base Failure Rate - λ_b
(T = 85°C Max Rated)
(Characteristics M, N)

T_A (°C)	Stress .1	.3	.5	.7	.9
0	.0010	.0012	.0041	.018	.059
10	.0010	.0013	.0042	.018	.060
20	.0011	.0013	.0043	.018	.062
30	.0011	.0014	.0045	.020	.066
40	.0012	.0015	.0050	.022	.073
50	.0015	.0018	.0059	.026	.086
60	.0020	.0024	.0079	.034	.11
70	.0032	.0039	.013	.055	.18
80	.0069	.0085	.028	.12	.40

$$\lambda_b = .00099\left[\left(\frac{S}{.4}\right)^5 + 1\right]\exp\left(2.5\left(\frac{T+273}{358}\right)^{18}\right)$$

T = Ambient Temperature (°C)

S = Ratio of Operating to Rated Voltage

Operating voltage is the sum of applied D.C. voltage and peak A.C. voltage.

Base Failure Rate - λ_b
(T = 125°C Max Rated)
(Characteristics Q, R, S)

T_A (°C)	Stress .1	.3	.5	.7	.9
0	.00099	.0012	.0040	.017	.058
10	.0010	.0012	.0040	.017	.058
20	.0010	.0012	.0041	.017	.059
30	.0010	.0012	.0041	.018	.059
40	.0010	.0013	.0041	.018	.060
50	.0011	.0013	.0043	.018	.062
60	.0011	.0014	.0044	.019	.064
70	.0012	.0015	.0048	.020	.069
80	.0013	.0016	.0054	.023	.077
90	.0016	.0020	.0065	.028	.094
100	.0022	.0027	.0087	.038	.13
110	.0035	.0043	.014	.06	.20
120	.0073	.0090	.029	.13	.43

$$\lambda_b = .00099\left[\left(\frac{S}{.4}\right)^5 + 1\right]\exp\left(2.5\left(\frac{T+273}{398}\right)^{18}\right)$$

T = Ambient Temperature (°C)

S = Ratio of Operating to Rated Voltage

Operating voltage is the sum of applied D.C. voltage and peak A.C. voltage.

10.5 CAPACITORS, FIXED, PLASTIC AND METALLIZED PLASTIC

Capacitance Factor - π_{CV}

Capacitance, C (μF)	π_{CV}
0.0049	.70
0.33	1.0
7.1	1.3
38.	1.5
$\pi_{CV} = 1.1C^{0.085}$	

Quality Factor - π_Q

Quality	π_Q
S	.030
R	.10
P	.30
M	1.0
Lower	10

Environment Factor - π_E

Environment	π_E
G_B	1.0
G_F	2.0
G_M	10
N_S	5.0
N_U	16
A_{IC}	6
A_{IF}	11
A_{UC}	18
A_{UF}	30
A_{RW}	23
S_F	.50
M_F	13
M_L	34
C_L	610

10.6 CAPACITORS, FIXED, SUPER-METALLIZED PLASTIC

SPECIFICATION	STYLE	DESCRIPTION
MIL-C-83421	CRH	Super-Metallized Plastic, Est. Rel.

$$\lambda_p = \lambda_b \pi_{CV} \pi_Q \pi_E \text{ Failures}/10^6 \text{ Hours}$$

Base Failure Rate - λ_b
(T = 125°C Max Rated)

T_A (°C)	Stress .1	.3	.5	.7	.9
0	.00055	.00068	.0022	.0096	.032
10	.00055	.00068	.0022	.0096	.032
20	.00056	.00069	.0023	.0097	.033
30	.00056	.00069	.0023	.0098	.033
40	.00057	.00070	.0023	.0099	.033
50	.00058	.00072	.0024	.010	.034
60	.00061	.00075	.0025	.011	.036
70	.00065	.00081	.0026	.011	.038
80	.00073	.00091	.0030	.013	.043
90	.00089	.0011	.0036	.015	.052
100	.0012	.0015	.0049	.021	.07
110	.0019	.0024	.0078	.033	.11
120	.0040	.0050	.016	.070	.24

$$\lambda_b = .00055\left[\left(\frac{S}{.4}\right)^5 + 1\right]\exp\left(2.5\left(\frac{T+273}{398}\right)^{18}\right)$$

T = Ambient Temperature (°C)

S = Ratio of Operating to Rated Voltage

Operating voltage is the sum of applied D.C. voltage and peak A.C. voltage.

Capacitance Factor - π_{CV}

Capacitance, C (µF)	π_{CV}
.001	.64
0.14	1.0
2.4	1.3
23	1.6

$$\pi_{CV} = 1.2C^{0.092}$$

Quality Factor - π_Q

Quality	π_Q
S	.020
R	.10
P	.30
M	1.0
Lower	10

Environment Factor - π_E

Environment	π_E
G_B	1.0
G_F	4.0
G_M	8.0
N_S	5.0
N_U	14
A_{IC}	4.0
A_{IF}	6.0
A_{UC}	13.0
A_{UF}	20
A_{RW}	20
S_F	.50
M_F	11
M_L	29
C_L	530

10.7 CAPACITORS, FIXED, MICA

SPECIFICATION	STYLE	DESCRIPTION
MIL-C-5	CM	MICA (Dipped or Molded)
MIL-C-39001	CMR	MICA (Dipped), Established Reliability

$$\lambda_p = \lambda_b \pi_{CV} \pi_Q \pi_E \text{ Failures}/10^6 \text{ Hours}$$

Base Failure Rate - λ_b
(T=70°C Max Rated)
(MIL-C-5, Temp. Range M)

T_A (°C)	Stress .1	.3	.5	.7	.9
0	.00030	.00041	.00086	.0019	.0036
10	.00047	.00066	.0014	.0030	.0058
20	.00075	.0011	.0022	.0047	.0092
30	.0012	.0017	.0035	.0075	.015
40	.0019	.0027	.0056	.012	.023
50	.0031	.0043	.0089	.019	.037
60	.0049	.0068	.014	.030	.059
70	.0078	.011	.023	.049	.095

$$\lambda_b = 8.6 \times 10^{-10}\left[\left(\frac{S}{.4}\right)^3 + 1\right]\exp\left(16\left(\frac{T+273}{343}\right)\right)$$

T = Ambient Temperature (°C)
S = Ratio of Operating to Rated Voltage

Operating voltage is the sum of applied D.C. voltage and peak A.C. voltage.

Base Failure Rate - λ_b
(T=85°C Max Rated)
(MIL-C-5, Temp. Range N)

T_A (°C)	Stress .1	.3	.5	.7	.9
0	.00017	.00024	.00051	.0011	.0021
10	.00027	.00038	.00079	.0017	.0033
20	.00042	.00059	.0012	.0027	.0052
30	.00066	.00093	.0019	.0042	.0081
40	.0010	.0015	.003	.0065	.013
50	.0016	.0023	.0047	.010	.020
60	.0025	.0036	.0074	.016	.031
70	.0040	.0056	.012	.025	.048
80	.0062	.0087	.018	.039	.076

$$\lambda_b = 8.6 \times 10^{-10}\left[\left(\frac{S}{.4}\right)^3 + 1\right]\exp\left(16\left(\frac{T+273}{358}\right)\right)$$

T = Ambient Temperature (°C)
S = Ratio of Operating to Rated Voltage

Operating voltage is the sum of applied D.C. voltage and peak A.C. voltage.

Base Failure Rate - λ_b
(T=125°C Max Rated)
(MIL-C-5, Temp. Range O; MIL-C-39001 Temp. Range O)

T_A (°C)	Stress .1	.3	.5	.7	.9
0	.00005	.00007	.00015	.00032	.00062
10	.00008	.00011	.00022	.00048	.00093
20	.00011	.00016	.00033	.00071	.0014
30	.00017	.00024	.00050	.0011	.0021
40	.00025	.00036	.00074	.0016	.0031
50	.00038	.00053	.0011	.0024	.0046
60	.00057	.0008	.0017	.0036	.0069
70	.00085	.0012	.0025	.0053	.010
80	.0013	.0018	.0037	.008	.016
90	.0019	.0027	.0055	.012	.023
100	.0028	.0040	.0083	.018	.035
110	.0042	.0059	.012	.027	.052
120	.0063	.0089	.018	.040	.077

$$\lambda_b = 8.6 \times 10^{-10}\left[\left(\frac{S}{.4}\right)^3 + 1\right]\exp\left(16\left(\frac{T+273}{398}\right)\right)$$

T = Ambient Temperature (°C)
S = Ratio of Operating to Rated Voltage

Operating voltage is the sum of applied D.C. voltage and peak A.C. voltage.

Base Failure Rate - λ_b
(T=150°C Max Rated)
(MIL-C-5, Temp. Range P; MIL-C-39001, Temp. Range P)

T_A (°C)	Stress .1	.3	.5	.7	.9
0	.00003	.00004	.00008	.00017	.00033
10	.00004	.00005	.00011	.00024	.00047
20	.00006	.00008	.00017	.00036	.00069
30	.00008	.00012	.00024	.00052	.0010
40	.00012	.00017	.00035	.00076	.0015
50	.00018	.00025	.00051	.0011	.0022
60	.00026	.00036	.00075	.0016	.0031
70	.00038	.00053	.0011	.0024	.0046
80	.00055	.00077	.0016	.0034	.0067
90	.0008	.0011	.0023	.0050	.0098
100	.0012	.0016	.0034	.0073	.014
110	.0017	.0024	.0050	.011	.021
120	.0025	.0035	.0073	.016	.030
130	.0036	.0051	.011	.023	.044
140	.0053	.0074	.015	.033	.065
150	.0078	.011	.023	.049	.095

$$\lambda_b = 8.6 \times 10^{-10}\left[\left(\frac{S}{.4}\right)^3 + 1\right]\exp\left(16\left(\frac{T+273}{423}\right)\right)$$

T = Ambient Temperature (°C)
S = Ratio of Operating to Rated Voltage

Operating voltage is the sum of applied D.C. voltage and peak A.C. voltage.

Capacitance Factor - π_{CV}

Capacitance, C (pF)	π_{CV}
2	.50
38	.75
300	1.0
2000	1.3
8600	1.6
29000	1.9
84000	2.2

$\pi_{CV} = 0.45C^{.14}$

Quality Factor - π_Q

Quality	π_Q
T	.010
S	.030
R	.10
P	.30
M	1.0
L	1.5
MIL-C-5, Non-Est. Rel. Dipped	3.0
MIL-C-5, Non-Est. Rel. Molded	6.0
Lower	15

Environment Factor - π_E

Environment	π_E
G_B	1.0
G_F	2.0
G_M	10
N_S	6.0
N_U	16
A_{IC}	5.0
A_{IF}	7.0
A_{UC}	22
A_{UF}	28
A_{RW}	23
S_F	.50
M_F	13
M_L	34
C_L	610

10.8 CAPACITORS, FIXED, MICA, BUTTON

SPECIFICATION	STYLE	DESCRIPTION
MIL-C-10950	CB	MICA, Button Style

$$\lambda_p = \lambda_b \pi_{CV} \pi_Q \pi_E \text{ Failures}/10^6 \text{ Hours}$$

Base Failure Rate - λ_b
(T = 85°C Max Rated)
(Style CB50)

T_A (°C)	Stress .1	.3	.5	.7	.9
0	.0067	.0094	.019	.042	.082
10	.0071	.0099	.021	.044	.086
20	.0076	.011	.022	.047	.092
30	.0082	.011	.024	.051	.10
40	.009	.013	.026	.056	.11
50	.010	.014	.029	.063	.12
60	.012	.016	.033	.072	.14
70	.013	.019	.039	.084	.16
80	.016	.023	.047	.10	.20

$$\lambda_b = .0053\left[\left(\frac{S}{.4}\right)^3 + 1\right]\exp\left(1.2\left(\frac{T+273}{358}\right)^{6.3}\right)$$

T = Ambient Temperature (°C)

S = Ratio of Operating to Rated Voltage

Operating voltage is the sum of applied D.C. voltage and peak A.C. voltage.

Base Failure Rate - λ_b
(T = 150°C Max Rated)
(All Types Except CB50)

T_A (°C)	Stress .1	.3	.5	.7	.9
0	.0058	.0081	.017	.036	.071
10	.0059	.0083	.017	.037	.072
20	.0061	.0085	.018	.038	.074
30	.0062	.0087	.018	.039	.076
40	.0064	.009	.019	.040	.079
50	.0067	.0094	.019	.042	.082
60	.0070	.0098	.020	.044	.086
70	.0074	.010	.022	.046	.090
80	.0079	.011	.023	.049	.096
90	.0085	.012	.025	.053	.10
100	.0093	.013	.027	.058	.11
110	.010	.014	.03	.064	.12
120	.011	.016	.033	.072	.14
130	.013	.018	.038	.082	.16
140	.015	.021	.044	.095	.18
150	.018	.025	.052	.11	.22

$$\lambda_b = .0053\left[\left(\frac{S}{.4}\right)^3 + 1\right]\exp\left(1.2\left(\frac{T+273}{423}\right)^{6.3}\right)$$

T = Ambient Temperature (°C)

S = Ratio of Operating to Rated Voltage

Operating voltage is the sum of applied D.C. voltage and peak A.C. voltage.

10.8 CAPACITORS, FIXED, MICA, BUTTON

Quality Factor - π_Q

Quality	π_Q
MIL-C-10950	5.0
Lower	15

Capacitance Factor - π_{CV}

Capacitance, C (pF)	π_{CV}
8	.50
50	.76
160	1.0
500	1.3
1200	1.6
2600	1.9
5000	2.2

$\pi_{CV} = .31C^{0.23}$

Environment Factor - π_E

Environment	π_E
G_B	1.0
G_F	2.0
G_M	10
N_S	5.0
N_U	16
A_{IC}	5.0
A_{IF}	7.0
A_{UC}	22
A_{UF}	28
A_{RW}	23
S_F	.50
M_F	13
M_L	34
C_L	610

10.9 CAPACITORS, FIXED, GLASS

SPECIFICATION	STYLE	DESCRIPTION
MIL-C-11272	CY	Glass
MIL-C-23269	CYR	Glass, Established Reliability

$$\lambda_p = \lambda_b \pi_{CV} \pi_Q \pi_E \text{ Failures}/10^6 \text{ Hours}$$

Base Failure Rate - λ_b
(T=125°C Max Rated)
(All MIL-C-23296 and MIL-C-11272 Temp. Range C)

T_A (°C)	Stress .1	.3	.5	.7	.9
0	.00005	.00005	.00010	.00023	.00055
10	.00007	.00008	.00014	.00035	.00083
20	.00011	.00012	.00022	.00052	.0012
30	.00016	.00018	.00032	.00078	.0018
40	.00024	.00027	.00048	.0012	.0028
50	.00036	.00041	.00072	.0017	.0041
60	.00054	.00061	.0011	.0026	.0062
70	.0008	.00091	.0016	.0039	.0092
80	.0012	.0014	.0024	.0058	.014
90	.0018	.0020	.0036	.0087	.021
100	.0027	.0030	.0054	.013	.031
110	.0040	.0045	.0080	.019	.046
120	.0060	.0068	.012	.029	.069

$$\lambda_b = 8.25 \times 10^{-10} \left[\left(\frac{S}{.5} \right)^4 + 1 \right] \exp\left(16 \left(\frac{T+273}{398} \right) \right)$$

T = Ambient Temperature (°C)

S = Ratio of Operating to Rated Voltage

Operating voltage is the sum of applied D.C. voltage and peak A.C. voltage.

Base Failure Rate - λ_b
(T = 200°C Max Rated)
(MIL-C-11272 Temp. Range D)

T_A (°C)	Stress .1	.3	.5	.7	.9
0	.00001	.00001	.00002	.00004	.00010
10	.00001	.00001	.00002	.00006	.00014
20	.00002	.00002	.00003	.00008	.00019
30	.00002	.00003	.00005	.00011	.00027
40	.00003	.00004	.00007	.00016	.00038
50	.00005	.00005	.00009	.00022	.00053
60	.00006	.00007	.00013	.00031	.00074
70	.00009	.00010	.00018	.00044	.0010
80	.00013	.00014	.00025	.00061	.0015
90	.00018	.00020	.00035	.00086	.0020
100	.00025	.00028	.00050	.0012	.0029
110	.00035	.00039	.00070	.0017	.0040
120	.00049	.00055	.00098	.0024	.0056
130	.00069	.00078	.0014	.0033	.0079
140	.00096	.0011	.0019	.0047	.011
150	.0014	.0015	.0027	.0065	.016
160	.0019	.0021	.0038	.0092	.022
170	.0027	.0030	.0053	.013	.031
180	.0037	.0042	.0075	.018	.043
190	.0052	.0059	.010	.025	.060
200	.0073	.0083	.015	.035	.084

$$\lambda_b = 8.25 \times 10^{-10} \left[\left(\frac{S}{.5} \right)^4 + 1 \right] \exp\left(16 \left(\frac{T+273}{473} \right) \right)$$

T = Ambient Temperature (°C)

S = Ratio of Operating to Rated Voltage

Operating voltage is the sum of applied D.C. voltage and peak A.C. voltage.

Capacitance Factor - π_{CV}

Capacitance, C (pF)	π_{CV}
1	.62
4	.75
30	1.0
200	1.3
900	1.6
3000	1.9
8500	2.2

$\pi_{CV} = 0.62C^{0.14}$

Quality Factor - π_Q

Quality	π_Q
S	.030
R	.10
P	.30
M	1.0
L	3.0
MIL-C-11272, Non-Est. Rel.	3.0
Lower	10

Environment Factor - π_E

Environment	π_E
G_B	1.0
G_F	2.0
G_M	10
N_S	6.0
N_U	16
A_{IC}	5.0
A_{IF}	7.0
A_{UC}	22
A_{UF}	28
A_{RW}	23
S_F	.50
M_F	13
M_L	34
C_L	610

10.10 CAPACITORS, FIXED, CERAMIC, GENERAL PURPOSE

SPECIFICATION	STYLE	DESCRIPTION
MIL-C-11015	CK	Ceramic, General Purpose
MIL-C-39014	CKR	Ceramic, General Purpose, Est. Rel.

$$\lambda_p = \lambda_b \pi_{CV} \pi_Q \pi_E \text{ Failures}/10^6 \text{ Hours}$$

Base Failure Rate - λ_b
(T = 85°C Max Rated)
(MIL-C-39014 Styles CKR13, 48, 64, 72;
MIL-C-11015 Type A Rated Temperature)

T_A (°C)	Stress .1	.3	.5	.7	.9
0	.00067	.0013	.0036	.0088	.018
10	.00069	.0013	.0037	.0091	.019
20	.00071	.0014	.0038	.0093	.019
30	.00073	.0014	.0039	.0096	.020
40	.00075	.0014	.004	.0099	.020
50	.00077	.0015	.0042	.010	.021
60	.00079	.0015	.0043	.010	.021
70	.00081	.0016	.0044	.011	.022
80	.00083	.0016	.0045	.011	.023

$$\lambda_b = .0003\left[\left(\frac{S}{.3}\right)^3 + 1\right]\exp\left(\frac{T+273}{358}\right)$$

T = Ambient Temperature (°C)
S = Ratio of Operating to Rated Voltage

Operating voltage is the sum of applied D.C. voltage and peak A.C. voltage.

Base Failure Rate - λ_b
(T = 125°C Max Rated)
(MIL-C-39014 Styles CKR05-12, 14-19, 73, 74;
MIL-C-11015 Type B Rated Temperature)

T_A (°C)	Stress .1	.3	.5	.7	.9
0	.00062	.0012	.0033	.0082	.017
10	.00063	.0012	.0034	.0084	.017
20	.00065	.0013	.0035	.0086	.018
30	.00067	.0013	.0036	.0088	.018
40	.00068	.0013	.0037	.0090	.018
50	.00070	.0014	.0038	.0093	.019
60	.00072	.0014	.0039	.0095	.019
70	.00074	.0014	.0040	.0097	.020
80	.00076	.0015	.0041	.010	.020
90	.00077	.0015	.0042	.010	.021
100	.00079	.0015	.0043	.010	.021
110	.00081	.0016	.0044	.011	.022
120	.00084	.0016	.0045	.011	.023

$$\lambda_b = .0003\left[\left(\frac{S}{.3}\right)^3 + 1\right]\exp\left(\frac{T+273}{398}\right)$$

T = Ambient Temperature (°C)
S = Ratio of Operating to Rated Voltage

Operating voltage is the sum of applied D.C. voltage and peak A.C. voltage.

Base Failure Rate - λ_b
(T = 150°C Max Rated)
(MIL-C-11015 Type C Rated Temperature)

T_A (°C)	Stress .1	.3	.5	.7	.9
0	.00059	.0011	.0032	.0078	.016
10	.00061	.0012	.0033	.008	.016
20	.00062	.0012	.0034	.0082	.017
30	.00064	.0012	.0035	.0084	.017
40	.00065	.0013	.0035	.0086	.018
50	.00067	.0013	.0036	.0088	.018
60	.00068	.0013	.0037	.009	.018
70	.00070	.0013	.0038	.0092	.019
80	.00072	.0014	.0039	.0095	.019
90	.00073	.0014	.0040	.0097	.020
100	.00075	.0014	.0041	.0099	.020
110	.00077	.0015	.0042	.010	.021
120	.00079	.0015	.0043	.010	.021
130	.00081	.0016	.0044	.011	.022
140	.00083	.0016	.0045	.011	.022
150	.00085	.0016	.0046	.011	.023

$$\lambda_b = .0003\left[\left(\frac{S}{.3}\right)^3 + 1\right]\exp\left(\frac{T+273}{423}\right)$$

T = Ambient Temperature (°C)

S = Ratio of Operating to Rated Voltage

Operating voltage is the sum of applied D.C. voltage and peak A.C. voltage.

NOTE: The rated temperature designation (type A, B, or C) is shown in the part number, e.g., CKG1**A**W22M).

10.10 CAPACITORS, FIXED, CERAMIC, GENERAL PURPOSE

Capacitance Factor - π_{CV}

Capacitance, C (pF)	π_{CV}
6.0	.50
240	.75
3300	1.0
36,000	1.3
240,000	1.6
1,100,000	1.9
4,300,000	2.2

$\pi_{CV} = .41C^{0.11}$

Quality Factor - π_Q

Quality	π_Q
S	.030
R	.10
P	.30
M	1.0
L	3.0
MIL-C-11015, Non-Est. Rel.	3.0
Lower	10

Environment Factor - π_E

Environment	π_E
G_B	1.0
G_F	2.0
G_M	9.0
N_S	5.0
N_U	15
A_{IC}	4.0
A_{IF}	4.0
A_{UC}	8.0
A_{UF}	12
A_{RW}	20
S_F	.40
M_F	13
M_L	34
C_L	610

10.11 CAPACITORS, FIXED, CERAMIC, TEMPERATURE COMPENSATING AND CHIP

SPECIFICATION	STYLE	DESCRIPTION
MIL-C-20	CCR and CC	Ceramic, Temperature Compensating, Est. and Non Est. Rel.
MIL-C-55681	CDR	Ceramic, Chip, Est. Rel.

$$\lambda_p = \lambda_b \pi_{CV} \pi_Q \pi_E \text{ Failures}/10^6 \text{ Hours}$$

Base Failure Rate - λ_b
(T = 85°C Max Rated)
(MIL-C-20 Styles CC 20, 25, 30, 32, 35, 45, 85, 95-97)

T_A (°C)	Stress .1	.3	.5	.7	.9
0	.00015	.00028	.00080	.0019	.0040
10	.00022	.00042	.0012	.0029	.0059
20	.00033	.00063	.0018	.0043	.0088
30	.00049	.00094	.0026	.0064	.013
40	.00073	.0014	.0039	.0096	.020
50	.0011	.0021	.0059	.014	.029
60	.0016	.0031	.0088	.021	.044
70	.0024	.0046	.013	.032	.065
80	.0036	.0069	.019	.047	.097

$$\lambda_b = 2.6 \times 10^{-9}\left[\left(\frac{S}{.3}\right)^3 + 1\right]\exp\left(14.3\left(\frac{T+273}{358}\right)\right)$$

T = Ambient Temperature (°C)
S = Ratio of Operating to Rated Voltage

Operating voltage is the sum of applied D.C. voltage and peak A.C. voltage.

Base Failure Rate - λ_b
(T = 125°C Max Rated)
(MIL-C-20 Styles CC 5-9,13-19, 21, 22, 26, 27, 31, 33, 36, 37, 47, 50-57, 75-79, 81-83, CCR 05-09,13-19, 54-57, 75-79, 81-83, 90; MIL-C-55681 All CDR Styles)

T_A (°C)	Stress .1	.3	.5	.7	.9
0	.00005	.00009	.00027	.00065	.0013
10	.00007	.00014	.00038	.00093	.0019
20	.00010	.00019	.00055	.0013	.0027
30	.00014	.00028	.00078	.0019	.0039
40	.00021	.00040	.0011	.0027	.0056
50	.00030	.00057	.0016	.0039	.008
60	.00042	.00082	.0023	.0056	.011
70	.00061	.0012	.0033	.008	.016
80	.00087	.0017	.0047	.011	.023
90	.0012	.0024	.0068	.016	.034
100	.0018	.0034	.0097	.024	.048
110	.0026	.0049	.014	.034	.069
120	.0037	.0071	.020	.048	.099

$$\lambda_b = 2.6 \times 10^{-9}\left[\left(\frac{S}{.3}\right)^3 + 1\right]\exp\left(14.3\left(\frac{T+273}{398}\right)\right)$$

T = Ambient Temperature (°C)
S = Ratio of Operating to Rated Voltage

Operating voltage is the sum of applied D.C. voltage and peak A.C. voltage.

Capacitance Factor - π_{CV}

Capacitance, C (pF)	π_{CV}
1	.59
7	.75
81	1.0
720	1.3
4,100	1.6
17,000	1.9
58,000	2.2

$$\pi_{CV} = .59C^{0.12}$$

Quality Factor - π_Q

Quality	π_Q
S	.030
R	.10
P	.30
M	1.0
Non-Est. Rel.	3.0
Lower	10

Environment Factor - π_E

Environment	π_E
G_B	1.0
G_F	2.0
G_M	10
N_S	5.0
N_U	17
A_{IC}	4.0
A_{IF}	8.0
A_{UC}	16
A_{UF}	35
A_{RW}	24
S_F	.50
M_F	13
M_L	34
C_L	610

10.12 CAPACITORS, FIXED, ELECTROLYTIC, TANTALUM, SOLID

SPECIFICATION	STYLE	DESCRIPTION
MIL-C-39003	CSR	Tantalum Electrolytic (Solid), Est. Rel.

$$\lambda_p = \lambda_b \pi_{CV} \pi_{SR} \pi_Q \pi_E \text{ Failures}/10^6 \text{ Hours}$$

Base Failure Rate - λ_b

T_A (°C)	Stress .1	.3	.5	.7	.9
0	.0042	.0058	.012	.026	.051
10	.0043	.0060	.012	.027	.052
20	.0045	.0063	.013	.028	.055
30	.0048	.0067	.014	.030	.058
40	.0051	.0072	.015	.032	.063
50	.0057	.0079	.016	.035	.069
60	.0064	.009	.019	.040	.078
70	.0075	.011	.022	.047	.092
80	.0092	.013	.027	.058	.11
90	.012	.017	.034	.074	.14
100	.016	.023	.047	.10	
110	.024	.034	.07	.15	
120	.039	.054	.11	.24	

$$\lambda_b = .00375\left[\left(\frac{S}{.4}\right)^3 + 1\right]\exp\left(2.6\left(\frac{T+273}{398}\right)^9\right)$$

T = Ambient Temperature (°C)
S = Ratio of Operating to Rated Voltage

Operating voltage is the sum of applied D.C. voltage and peak A.C. voltage.

Capacitance Factor - π_{CV}

Capacitance, C (µF)	π_{CV}
.003	0.5
.091	.75
1.0	1.0
8.9	1.3
50	1.6
210	1.9
710	2.2

$$\pi_{CV} = 1.0C^{0.12}$$

Quality Factor - π_Q

Quality	π_Q
D	0.0010
C	0.010
S	0.030
B	0.030
R	0.10
P	0.30
M	1.0
L	1.5
Lower	10

Series Resistance Factor - π_{SR}

Circuit Resistance, CR (ohms/volt)	π_{SR}
>0.8	.066
>0.6 to 0.8	.10
>0.4 to 0.6	.13
>0.2 to 0.4	.20
>0.1 to 0.2	.27
0 to 0.1	.33

$$CR = \frac{\text{Eff. Res. Between Cap. and Pwr. Supply}}{\text{Voltage Applied to Capacitor}}$$

Environment Factor - π_E

Environment	π_E
G_B	1.0
G_F	2.0
G_M	8.0
N_S	5.0
N_U	14
A_{IC}	4.0
A_{IF}	5.0
A_{UC}	12
A_{UF}	20
A_{RW}	24
S_F	.40
M_F	11
M_L	29
C_L	530

10.13 CAPACITORS, FIXED, ELECTROLYTIC, TANTALUM, NON-SOLID

SPECIFICATION	STYLE	DESCRIPTION
MIL-C-3965	CL	Tantalum, Electrolytic (Non-Solid)
MIL-C-39006	CLR	Tantalum, Electrolytic (Non-Solid), Est. Rel.

$$\lambda_p = \lambda_b \pi_{CV} \pi_C \pi_Q \pi_E \text{ Failures}/10^6 \text{ Hours}$$

Base Failure Rate - λ_b
(T = 85°C Max Rated)
(MIL-C-3965 Styles CL24-27, 34-37)

T_A (°C)	Stress .1	.3	.5	.7	.9
0	.0021	.0029	.0061	.013	.026
10	.0023	.0032	.0067	.014	.028
20	.0026	.0036	.0075	.016	.031
30	.0030	.0042	.0087	.019	.036
40	.0036	.0051	.011	.023	.044
50	.0047	.0066	.014	.029	.057
60	.0065	.0091	.019	.041	.079
70	.0098	.014	.029	.062	.12
80	.017	.023	.048	.10	.20

$$\lambda_b = .00165\left[\left(\frac{S}{.4}\right)^3 + 1\right]\exp\left(2.6\left(\frac{T+273}{358}\right)^{9.0}\right)$$

T = Ambient Temperature (°C)
S = Ratio of Operating to Rated Voltage

Operating voltage is the sum of applied D.C. voltage and peak A.C. voltage.

Base Failure Rate - λ_b
(T = 125°C Max Rated)
(MIL-C-3965 Styles CL20-23, 30-33, 40-43, 46-56, 64-67, 70-73; and all MIL-C-39006 Styles)

T_A (°C)	Stress .1	.3	.5	.7	.9
0	.0018	.0026	.0053	.011	.022
10	.0019	.0026	.0055	.012	.023
20	.0020	.0028	.0057	.012	.024
30	.0021	.0029	.0061	.013	.026
40	.0023	.0032	.0066	.014	.028
50	.0025	.0035	.0072	.016	.030
60	.0028	.0040	.0082	.018	.034
70	.0033	.0046	.0096	.021	.040
80	.0041	.0057	.012	.025	.049
90	.0052	.0073	.015	.033	.064
100	.0071	.010	.021	.045	
110	.011	.015	.031	.066	
120	.017	.024	.050	.11	

$$\lambda_b = .00165\left[\left(\frac{S}{.4}\right)^3 + 1\right]\exp\left(2.6\left(\frac{T+273}{398}\right)^{9.0}\right)$$

T = Ambient Temperature (°C)
S = Ratio of Operating to Rated Voltage

Operating voltage is the sum of applied D.C. voltage and peak A.C. voltage.

Base Failure Rate - λ_b
(T = 175°C Max Rated)
(MIL-C-3965 Styles CL10, 13, 14, 16-18)

T_A (°C)	Stress .1	.3	.5	.7	.9
0	.0017	.0024	.0050	.011	.021
10	.0017	.0024	.0051	.011	.021
20	.0018	.0025	.0052	.011	.022
30	.0018	.0025	.0053	.011	.022
40	.0019	.0026	.0054	.012	.023
50	.0019	.0027	.0056	.012	.023
60	.002	.0028	.0058	.013	.024
70	.0021	.0030	.0062	.013	.02[illegible]
80	.0023	.0032	.0066	.014	.028
90	.0025	.0035	.0072	.016	.030
100	.0028	.0039	.0080	.017	.034
110	.0032	.0044	.0092	.020	.039
120	.0037	.0052	.011	.023	
130	.0046	.0064	.013	.029	
140	.0059	.0082	.017	.037	
150	.0079	.011	.023	.049	
160	.011	.016	.033	.071	
170	.018	.025	.051		

$$\lambda_b = .00165\left[\left(\frac{S}{.4}\right)^3 + 1\right]\exp\left(2.6\left(\frac{T+273}{448}\right)^{9.0}\right)$$

T = Ambient Temperature (°C)

S = Ratio of Operating to Rated Voltage

Operating voltage is the sum of applied D.C. voltage and peak A.C. voltage.

10.13 CAPACITORS, FIXED, ELECTROLYTIC, TANTALUM, NON-SOLID

Capacitance Factor - π_{CV}

Capacitance, C (μF)	π_{CV}
.091	.70
20	1.0
1100	1.3

$\pi_{CV} = .82C^{0.066}$

Construction Factor - π_C

Construction Type	π_C
Slug, All Tantalum	.30
Foil, Hermetic *	1.0
Slug, Hermetic *	2.0
Foil, Non-Hermetic *	2.5
Slug, Non-Hermetic *	3.0

*Type of Seal Identified as Follows:

1) MIL-C-3965 (CL) - Note Last Letter in Part Number:
G - Hermetic E - Non-Hermetic

Example: CL10BC700TPG is Hermetic

2) MIL-C-39006 (CLR) - Consult Individual Part Specification Sheet (slash sheet)

NOTE:
Foil Types - CL 20-25, 30-33, 40, 41, 51-54, 70-73
CLR 25, 27, 35, 37, 53, 71, 73

Slug Types - CL 10, 13, 14, 16, 17, 18, 55, 56, 64-66, 67
CLR 10, 14, 17, 65, 69, 89

All Tantalum - CL 26, 27, 34-37, 42, 43, 46-49
CLR 79

Quality Factor - π_Q

Quality	π_Q
S	.030
R	.10
P	.30
M	1.0
L	1.5
MIL-C-3965, Non-Est. Rel.	3.0
Lower	10

Environment Factor - π_E

Environment	π_E
G_B	1.0
G_F	2.0
G_M	10
N_S	6.0
N_U	16
A_{IC}	4.0
A_{IF}	8.0
A_{UC}	14
A_{UF}	30
A_{RW}	23
S_F	.50
M_F	13
M_L	34
C_L	610

10.14 CAPACITORS, FIXED, ELECTROLYTIC, ALUMINUM

SPECIFICATION	STYLE	DESCRIPTION
MIL-C-39018	CUR and CU	Electrolytic, Aluminum Oxide, Est. Rel. and Non-Est. Rel.

$$\lambda_p = \lambda_b \pi_{CV} \pi_Q \pi_E \text{ Failures}/10^6 \text{ Hours}$$

Base Failure Rate - λ_b
(T = 85°C Max Rated)
(MIL-C-39018 Style 71)

T_A (°C)	Stress .1	.3	.5	.7	.9
0	.0095	.011	.019	.035	.064
10	.012	.015	.024	.046	.084
20	.017	.020	.033	.062	.11
30	.023	.028	.046	.087	.16
40	.034	.042	.068	.13	.23
50	.054	.065	.11	.20	.36
60	.089	.11	.18	.33	.60
70	.16	.19	.31	.58	1.1
80	.29	.35	.58	1.1	2.0

$$\lambda_b = .00254\left[\left(\frac{S}{.5}\right)^3 + 1\right]\exp\left(5.09\left(\frac{T+273}{358}\right)^5\right)$$

T = Ambient Temperature (°C)

S = Ratio of Operating to Rated Voltage

Operating voltage is the sum of applied D.C. voltage and peak A.C. voltage.

Base Failure Rate - λ_b
(T = 105°C Max Rated)
(MIL-C-39018 Styles 16 and 17)

T_A (°C)	Stress .1	.3	.5	.7	.9
0	.0070	.0084	.014	.026	.047
10	.0085	.010	.017	.031	.057
20	.011	.013	.021	.040	.072
30	.014	.017	.027	.051	.094
40	.019	.022	.037	.069	.13
50	.026	.031	.052	.097	.18
60	.038	.046	.076	.14	.26
70	.059	.071	.12	.22	.40
80	.095	.11	.19	.35	.64
90	.16	.20	.32	.61	1.1
100	.30	.36	.59	1.1	2.0

$$\lambda_b = .00254\left[\left(\frac{S}{.5}\right)^3 + 1\right]\exp\left(5.09\left(\frac{T+273}{378}\right)^5\right)$$

T = Ambient Temperature (°C)

S = Ratio of Operating to Rated Voltage

Operating voltage is the sum of applied D.C. voltage and peak A.C. voltage.

Base Failure Rate - λ_b
(T = 125°C Max Rated)
(All MIL-C-39018 Styles Except 71, 16 and 17)

T_A (°C)	Stress .1	.3	.5	.7	.9
0	.0055	.0067	.011	.021	.038
10	.0065	.0078	.013	.024	.044
20	.0077	.0093	.015	.029	.052
30	.0094	.011	.019	.035	.064
40	.012	.014	.023	.044	.080
50	.015	.019	.030	.057	.10
60	.021	.025	.041	.077	.14
70	.029	.035	.057	.11	.20
80	.042	.050	.083	.16	.28
90	.064	.077	.13	.24	.43
100	.10	.12	.20	.38	
110	.17	.21	.34	.63	
120	.30	.37	.60	1.1	

$$\lambda_b = .00254\left[\left(\frac{S}{.5}\right)^3 + 1\right]\exp\left(5.09\left(\frac{T+273}{398}\right)^5\right)$$

T = Ambient Temperature (°C)

S = Ratio of Operating to Rated Voltage

Operating voltage is the sum of applied D.C. voltage and peak A.C. voltage.

10.14 CAPACITORS, FIXED, ELECTROLYTIC, ALUMINUM

Capacitance Factor - π_{CV}

Capacitance, C (µF)	π_{CV}
2.5	.40
55	.70
400	1.0
1700	1.3
5500	1.6
14,000	1.9
32,000	2.2
65,000	2.5
120,000	2.8

$\pi_{CV} = .34C^{0.18}$

Environment Factor - π_E

Environment	π_E
G_B	1.0
G_F	2.0
G_M	12
N_S	6.0
N_U	17
A_{IC}	10
A_{IF}	12
A_{UC}	28
A_{UF}	35
A_{RW}	27
S_F	.50
M_F	14
M_L	38
C_L	690

Quality Factor - π_Q

Quality	π_Q
S	.030
R	.10
P	.30
M	1.0
Non-Est. Rel.	3.0
Lower	10

10.15 CAPACITORS, FIXED, ELECTROLYTIC (DRY), ALUMINUM

SPECIFICATION	STYLE	DESCRIPTION
MIL-C-62	CE	Aluminum, Dry Electrolyte, Polarized

$$\lambda_p = \lambda_b \pi_{CV} \pi_Q \pi_E \text{ Failures}/10^6 \text{ Hours}$$

Base Failure Rate - λ_b
(T = 85°C Max Rated)

T_A (°C)	Stress .1	.3	.5	.7	.9
0	.0064	.0074	.011	.020	.034
10	.0078	.009	.014	.024	.042
20	.0099	.011	.017	.030	.053
30	.013	.015	.023	.040	.070
40	.018	.021	.031	.055	.096
50	.026	.030	.046	.08	.14
60	.041	.047	.071	.12	.22
70	.068	.078	.12	.21	.36
80	.120	.14	.21	.37	.65

$$\lambda_b = .0028\left[\left(\frac{S}{.55}\right)^3 + 1\right]\exp\left(4.09\left(\frac{T+273}{358}\right)^{5.9}\right)$$

T = Ambient Temperature (°C)

S = Ratio of Operating to Rated Voltage

Operating voltage is the sum of applied D.C. voltage and peak A.C. voltage.

Quality Factor - π_Q

Quality	π_Q
MIL-SPEC	3.0
Lower	10

Environment Factor - π_E

Environment	π_E
G_B	1.0
G_F	2.0
G_M	12
N_S	6.0
N_U	17
A_{IC}	10
A_{IF}	12
A_{UC}	28
A_{UF}	35
A_{RW}	27
S_F	.50
M_F	14
M_L	38
C_L	690

Capacitance Factor - π_{CV}

Capacitance, C (μF)	π_{CV}
3.2	.40
62	.70
400	1.0
1600	1.3
4800	1.6
12,000	1.9
26,000	2.2
50,000	2.5
91,000	2.8

$$\pi_{CV} = .32C^{0.19}$$

10.16 CAPACITORS, VARIABLE, CERAMIC

SPECIFICATION	STYLE	DESCRIPTION
MIL-C-81	CV	Variable, Ceramic

$$\lambda_p = \lambda_b \pi_Q \pi_E \text{ Failures}/10^6 \text{ Hours}$$

Base Failure Rate - λ_b
(T = 85°C Max Rated)
(MIL-C-81 Styles CV 11, 14, 21, 31, 32, 34, 40, 41)

T_A (°C)	Stress .1	.3	.5	.7	.9
0	.0030	.016	.066	.18	.37
10	.0031	.017	.069	.18	.39
20	.0033	.018	.073	.20	.41
30	.0036	.020	.080	.21	.45
40	.0041	.022	.089	.24	.50
50	.0047	.026	.10	.28	.59
60	.0058	.031	.13	.34	.72
70	.0076	.041	.17	.45	.94
80	.011	.058	.24	.63	1.3

$$\lambda_b = .00224\left[\left(\frac{S}{.17}\right)^3 + 1\right]\exp\left(1.59\left(\frac{T+273}{358}\right)^{10.1}\right)$$

T = Ambient Temperature (°C)
S = Ratio of Operating to Rated Voltage

Operating voltage is the sum of applied D.C. voltage and peak A.C. voltage.

Base Failure Rate - λ_b
(T = 125°C Max Rated)
(MIL-C-81 Styles CV 35, 36)

T_A (°C)	Stress .1	.3	.5	.7	.9
0	.0028	.015	.061	.16	.35
10	.0028	.015	.062	.17	.35
20	.0029	.016	.064	.17	.36
30	.0030	.016	.066	.18	.37
40	.0031	.017	.068	.18	.39
50	.0033	.018	.072	.19	.41
60	.0035	.019	.077	.21	.44
70	.0038	.021	.084	.23	.48
80	.0043	.023	.095	.25	.54
90	.0050	.027	.11	.30	.63
100	.0062	.033	.14	.36	.76
110	.0079	.043	.17	.47	.98
120	.011	.059	.24	.64	1.4

$$\lambda_b = .00224\left[\left(\frac{S}{.17}\right)^3 + 1\right]\exp\left(1.59\left(\frac{T+273}{398}\right)^{10.1}\right)$$

T = Ambient Temperature (°C)
S = Ratio of Operating to Rated Voltage

Operating voltage is the sum of applied D.C. voltage and peak A.C. voltage.

Quality Factor - π_Q

Quality	π_Q
MIL-SPEC	4
Lower	20

Environment Factor - π_E

Environment	π_E
G_B	1.0
G_F	3.0
G_M	13
N_S	8.0
N_U	24
A_{IC}	6.0
A_{IF}	10
A_{UC}	37
A_{UF}	70
A_{RW}	36
S_F	.40
M_F	20
M_L	52
C_L	950

10.17 CAPACITORS, VARIABLE, PISTON TYPE

SPECIFICATION	STYLE	DESCRIPTION
MIL-C-14409	PC	Variable, Piston Type, Tubular Trimmer

$$\lambda_p = \lambda_b \pi_Q \pi_E \text{ Failures}/10^6 \text{ Hours}$$

Base Failure Rate - λ_b
(T = 125°C Max Rated)
(MIL-C-14409 Styles G, H, J, L, T)

T_A (°C)	Stress .1	.3	.5	.7	.9
0	.0030	.0051	.013	.031	.063
10	.0041	.0070	.018	.042	.085
20	.0055	.0094	.024	.057	.11
30	.0075	.013	.033	.077	.16
40	.010	.017	.044	.10	.21
50	.014	.024	.060	.14	.29
60	.019	.032	.082	.19	.39
70	.025	.043	.11	.26	.53
80	.034	.059	.15	.35	.71
90	.047	.079	.20	.48	.96
100	.063	.11	.27	.65	1.3
110	.086	.15	.37	.88	1.8
120	.12	.20	.51	1.2	2.4

$$\lambda_b = 7.3 \times 10^{-7}\left[\left(\frac{S}{.33}\right)^3 + 1\right]\exp\left(12.1\left(\frac{T+273}{398}\right)\right)$$

T = Ambient Temperature (°C)
S = Ratio of Operating to Rated Voltage
Operating voltage is the sum of applied D.C. voltage and peak A.C. voltage.

Base Failure Rate - λ_b
(T = 150°C Max Rated)
(MIL-C-14409 Characteristic Q)

T°C	Stress .1	.3	.5	.7	.9
0	.0019	.0032	.0081	.019	.038
10	.0025	.0042	.011	.025	.051
20	.0033	.0056	.014	.034	.068
30	.0044	.0074	.019	.045	.09
40	.0058	.0099	.025	.060	.12
50	.0077	.013	.034	.079	.16
60	.010	.018	.045	.11	.21
70	.014	.023	.060	.14	.28
80	.018	.031	.079	.19	.38
90	.024	.041	.11	.25	.50
100	.032	.055	.14	.33	.67
110	.043	.073	.19	.44	.89
120	.057	.097	.25	.59	1.2
130	.076	.13	.33	.78	1.6
140	.10	.17	.44	1.0	2.1
150	.13	.23	.59	1.4	2.8

$$\lambda_b = 7.3 \times 10^{-7}\left[\left(\frac{S}{.33}\right)^3 + 1\right]\exp\left(12.1\left(\frac{T+273}{423}\right)\right)$$

T = Ambient Temperature (°C)
S = Ratio of Operating to Rated Voltage
Operating voltage is the sum of applied D.C. voltage and peak A.C. voltage.

Quality Factor - π_Q

Quality	π_Q
MIL-SPEC	3
Lower	10

Environment Factor - π_E

Environment	π_E
G_B	1.0
G_F	3.0
G_M	12
N_S	7.0
N_U	18
A_{IC}	3.0
A_{IF}	4.0
A_{UC}	20
A_{UF}	30
A_{RW}	32
S_F	.50
M_F	18
M_L	46
C_L	830

10.18 CAPACITORS, VARIABLE, AIR TRIMMER

SPECIFICATION	STYLE	DESCRIPTION
MIL-C-92	CT	Variable, Air Trimmer

$$\lambda_p = \lambda_b \pi_Q \pi_E \text{ Failures}/10^6 \text{ Hours}$$

Base Failure Rate - λ_b
(T = 85°C Max Rated)

T_A (°C)	Stress .1	.3	.5	.7	.9
0	.0074	.013	.032	.076	.15
10	.010	.017	.044	.10	.21
20	.014	.023	.059	.14	.28
30	.018	.031	.08	.19	.38
40	.025	.042	.11	.26	.52
50	.034	.057	.15	.35	.70
60	.046	.078	.20	.47	.94
70	.062	.10	.27	.63	1.3
80	.083	.14	.36	.85	1.7

$$\lambda_b = 1.92 \times 10^{-6}\left[\left(\frac{S}{.33}\right)^3 + 1\right] \exp\left(10.8\left(\frac{T+273}{358}\right)\right)$$

T = Ambient Temperature (°C)

S = Ratio of Operating to Rated Voltage

Operating voltage is the sum of applied D.C. voltage and peak A.C. voltage.

Environment Factor - π_E

Environment	π_E
G_B	1.0
G_F	3.0
G_M	13
N_S	8.0
N_U	24
A_{IC}	6.0
A_{IF}	10
A_{UC}	37
A_{UF}	70
A_{RW}	36
S_F	.50
M_F	20
M_L	52
C_L	950

Quality Factor - π_Q

Quality	π_Q
MIL-SPEC	5
Lower	20

10.19 CAPACITORS, VARIABLE AND FIXED, GAS OR VACUUM

SPECIFICATION	STYLE	DESCRIPTION
MIL-C-23183	CG	Gas or Vacuum Dielectric, Fixed and Variable, Ceramic or Glass Envelope

$$\lambda_p = \lambda_b \pi_{CF} \pi_Q \pi_E \text{ Failures}/10^6 \text{ Hours}$$

Base Failure Rate - λ_b
(T = 85°C Max Rated)
(Styles CG 20, 21, 30, 31, 32, 40-44, 51, 60-64, 67)

T°C	Stress .1	.3	.5	.7	.9
0	.015	.081	.33	.88	1.9
10	.016	.084	.34	.92	1.9
20	.017	.090	.37	.98	2.1
30	.018	.098	.40	1.1	2.2
40	.020	.11	.45	1.2	2.5
50	.024	.13	.52	1.4	2.9
60	.029	.16	.64	1.7	3.6
70	.038	.20	.83	2.2	4.7
80	.054	.29	1.2	3.2	6.6

$$\lambda_b = .0112 \left[\left(\frac{S}{.17} \right)^3 + 1 \right] \exp\left(1.59 \left(\frac{T+273}{358} \right)^{10.1} \right)$$

T = Ambient Temperature (°C)
S = Ratio of Operating to Rated Voltage

Operating voltage is the sum of applied D.C. voltage and peak A.C. voltage.

Base Failure Rate - λ_b
(T = 100°C Max Rated)
(Styles CG 65, 66)

T°C	Stress .1	.3	.5	.7	.9
0	.014	.078	.30	.85	1.8
10	.015	.080	.33	.87	1.8
20	.015	.084	.34	.91	1.9
30	.016	.088	.36	.96	2.0
40	.018	.095	.39	1.0	2.2
50	.020	.11	.43	1.2	2.4
60	.022	.12	.49	1.3	2.8
70	.027	.14	.59	1.6	3.3
80	.034	.18	.74	2.0	4.2
90	.045	.24	.99	2.7	5.6
100	.066	.36	1.5	3.9	8.2

$$\lambda_b = .0112 \left[\left(\frac{S}{.17} \right)^3 + 1 \right] \exp\left(1.59 \left(\frac{T+273}{373} \right)^{10.1} \right)$$

T = Ambient Temperature (°C)
S = Ratio of Operating to Rated Voltage

Operating voltage is the sum of applied D.C. voltage and peak A.C. voltage.

Base Failure Rate - λ_b
(T = 125°C Max Rated)
(Style CG 50)

T°C	Stress .1	.3	.5	.7	.9
0	.014	.075	.31	.82	1.7
10	.014	.077	.31	.83	1.8
20	.014	.078	.32	.85	1.8
30	.015	.08	.33	.88	1.9
40	.016	.084	.34	.91	1.9
50	.016	.088	.36	.96	2.0
60	.018	.095	.39	1.0	2.2
70	.019	.10	.42	1.1	2.4
80	.022	.12	.48	1.3	2.7
90	.025	.14	.55	1.5	3.1
100	.031	.17	.68	1.8	3.8
110	.04	.21	.87	2.3	4.9
120	.055	.29	1.2	3.2	6.8

$$\lambda_b = .0112 \left[\left(\frac{S}{.17} \right)^3 + 1 \right] \exp\left(1.59 \left(\frac{T+273}{398} \right)^{10.1} \right)$$

T = Ambient Temperature (°C)
S = Ratio of Operating to Rated Voltage

Operating voltage is the sum of applied D.C. voltage and peak A.C. voltage.

10.19 CAPACITORS, VARIABLE AND FIXED, GAS OR VACUUM

Configuration Factor - π_{CF}

Configuration	π_{CF}
Fixed	.10
Variable	1.0

Quality Factor - π_Q

Quality	π_Q
MIL-SPEC	3.0
Lower	20

Environment Factor - π_E

Environment	π_E
G_B	1.0
G_F	3.0
G_M	14
N_S	8.0
N_U	27
A_{IC}	10
A_{IF}	18
A_{UC}	70
A_{UF}	108
A_{RW}	40
S_F	.50
M_F	N/A
M_L	N/A
C_L	N/A

10.20 CAPACITORS, EXAMPLE

Example

Given: A 400 VDC rated capacitor type CQ09A1KE153K3 is being used in a fixed ground environment, 55°C component ambient temperature, and 200 VDC applied with 50 Vrms @ 60 Hz. The capacitor is being procured in full accordance with the applicable specification.

The letters "CQ" in the type designation indicate that the specification is MIL-C-19978 and that it is a Non-Established Reliability quality level. The 1st "K" in the designation indicates characteristic K. The "E" in the designation corresponds to a 400 volt DC rating. The "153" in the designation expresses the capacitance in picofarads. The first two digits are significant and the third is the number of zeros to follow. Therefore, this capacitor has a capacitance of 15,000 picofarads. (NOTE: Pico = 10^{-12}, $\mu = 10^{-6}$)

The appropriate model for CQ style capacitors is given in Section 10.3. Based on the given information the following model factors are determined from the tables shown in Section 10.3. Voltage stress ratio must account for both the applied DC volts and the peak AC voltage, hence,

$S = .68$

$$S = \frac{\text{DC Volts Applied} + \sqrt{2}\,(\text{AC Volts Applied})}{\text{DC Rated Voltage}} = \frac{200 + \sqrt{2}\,(50)}{400} = .68$$

$\lambda_b = .0082$ — Substitute S = .68 and T_A = 55°C into equation shown with Characteristic K λ_b Table.

$\pi_{CV} = .94$ — Use Table Equation (Note 15,000 pF = .015 µF)

$\pi_Q = 10$

$\pi_E = 2.0$

$$\lambda_p = \lambda_b \pi_{CV} \pi_Q \pi_E = (.0082)(.94)(10)(2) = .15 \text{ Failures}/10^6 \text{ Hours}$$

SPECIFICATION	STYLE	DESCRIPTION
MIL-T-27	TF	Audio, Power and High Power Pulse
MIL-T-21038	TP	Low Power Pulse
MIL-T-55631	–	IF, RF and Discriminator

$$\lambda_p = \lambda_b \pi_Q \pi_E \text{ Failures}/10^6 \text{ Hours}$$

Base Failure Rate - λ_b

T_{HS} (°C)	Maximum Rated Operating Temperature (°C) 85[1]	105[2]	130[3]	155[4]	170[5]	>170[6]
30	.0024	.0023	.0022	.0021	.0018	.0016
35	.0026	.0023	.0023	.0022	.0018	.0016
40	.0028	.0024	.0024	.0022	.0019	.0016
45	.0032	.0025	.0025	.0022	.0019	.0016
50	.0038	.0027	.0026	.0023	.0020	.0017
55	.0047	.0029	.0027	.0023	.0020	.0017
60	.0060	.0032	.0029	.0023	.0021	.0017
65	.0083	.0035	.0030	.0024	.0021	.0017
70	.012	.0040	.0033	.0025	.0022	.0017
75	.020	.0047	.0035	.0026	.0023	.0017
80	.036	.0057	.0039	.0027	.0024	.0017
85	.075	.0071	.0043	.0028	.0024	.0017
90		.0093	.0048	.0029	.0025	.0018
95		.013	.0054	.0031	.0026	.0018
100		.019	.0062	.0033	.0027	.0018
105		.030	.0072	.0035	.0028	.0018
110			.0085	.0038	.0030	.0019
115			.010	.0042	.0031	.0019
120			.013	.0046	.0032	.0019
125			.016	.0052	.0034	.0020
130			.020	.0059	.0036	.0020
135				.0068	.0038	.0021
140				.0079	.0040	.0021
145				.0095	.0042	.0022
150				.011	.0044	.0023
155				.014	.0047	.0024
160					.0050	.0025
165					.0053	.0026
170					.0056	.0027
175						.0029
180						.0030
185						.0032

NOTE: The models are valid only if T_{HS} is not above the temperature rating for a given insulation class.

1 $\lambda_b = .0018 \exp\left(\frac{T_{HS} + 273}{329}\right)^{15.6}$ MIL-T-27 Insulation Class Q, MIL-T-21038 Insulation Class Q, and MIL-T-55631 Insulation Class O.*

2 $\lambda_b = .002 \exp\left(\frac{T_{HS} + 273}{352}\right)^{14}$ MIL-T-27 Insulation Class R, MIL-T-21038 Insulation Class R, and MIL-T-55631 Insulation Class A.*

3 $\lambda_b = .0018 \exp\left(\frac{T_{HS} + 273}{364}\right)^{8.7}$ MIL-T-27 Insulation Class S, MIL-T-21038 Insulation Class S, and MIL-T-55631 Insulation Class B.*

4 $\lambda_b = .002 \exp\left(\frac{T_{HS} + 273}{400}\right)^{10}$ MIL-T-27 Insulation Class V, MIL-T-21038 Insulation Class T, and MIL-T-55631 Insulation Class C.*

5 $\lambda_b = .00125 \exp\left(\frac{T_{HS} + 273}{398}\right)^{3.8}$ MIL-T-27 Insulation Class T and MIL-T-21038 Insulation Class U.*

6 $\lambda_b = .00159 \exp\left(\frac{T_{HS} + 273}{477}\right)^{8.4}$ MIL-T-27 Insulation Class U and MIL-T-21038 Insulation Class V.*

T_{HS} = Hot Spot Temperature (°C), See Section 11.3.

*Refer to Transformer Application Note for Determination of Insulation Class

11.1 INDUCTIVE DEVICES, TRANSFORMERS

Quality Factor - π_Q

Family Type*	MIL-SPEC	Lower
Pulse Transformers	1.5	5.0
Audio Transformers	3.0	7.5
Power Transformers and Filters	8.0	30
RF Transformers	12	30

* **Refer to Transformer Application Note for Determination of Family Type**

Environment Factor - π_E

Environment	π_E
G_B	1.0
G_F	6.0
G_M	12
N_S	5.0
N_U	16
A_{IC}	6.0
A_{IF}	8.0
A_{UC}	7.0
A_{UF}	9.0
A_{RW}	24
S_F	.50
M_F	13
M_L	34
C_L	610

TRANSFORMER APPLICATION NOTE: Insulation Class and Family Type Determination

MIL-T-27 Example Designation

TF	4	R	01	GA	576
MIL-T-27	Grade	Insulation Class	Family	Case Symbol	

Family Type Codes Are:

Power Transformer and Filter: 01 thru 09, 37 thru 41

Audio Transformer: 10 thru 21, 50 thru 53

Pulse Transformer: 22 thru 36, 54

MIL-T-21038 Example Designation

TP	4	Q	X1100BC001
MIL-T-21038	Grade	Insulation Class	

MIL-T-55631. The Transformers are Designated with the following Types, Grades and Classes.

Type I - Intermediate Frequency Transformer
Type II - Radio Frequency Transformer
Type III - Discriminator Transformer

Grade 1 - For Use When Immersion and Moisture Resistance Tests are Required
Grade 2 - For Use When Moisture Resistance Test is Required
Grade 3 - For Use in Sealed Assemblies

Class O - 85°C Maximum Operating Temperature
Class A - 105°C Maximum Operating Temperature
Class B - 125°C Maximum Operating Temperature
Class C - > 125°C Maximum Operating Temperature

The class denotes the maximum operating temperature (temperature rise plus maximum ambient temperature).

11.2 INDUCTIVE DEVICES, COILS

SPECIFICATION	STYLE	DESCRIPTION
MIL-C-15305	–	Fixed and Variable, RF
MIL-C-39010	–	Molded, RF, Est. Rel.

$$\lambda_p = \lambda_b \pi_C \pi_Q \pi_E \text{ Failures}/10^6 \text{ Hours}$$

Base Failure Rate - λ_b

T_{HS} (°C)	Maximum Operating Temperature (°C) 85[1]	105[2]	125[3]	150[4]
30	.00044	.00043	.00039	.00037
35	.00048	.00044	.0004	.00037
40	.00053	.00046	.00042	.00037
45	.0006	.00048	.00043	.00038
50	.00071	.00051	.00045	.00038
55	.00087	.00055	.00048	.00039
60	.0011	.0006	.00051	.0004
65	.0015	.00067	.00054	.00041
70	.0023	.00076	.00058	.00042
75	.0037	.00089	.00063	.00043
80	.0067	.0011	.00069	.00044
85	.014	.0013	.00076	.00046
90		.0018	.00085	.00047
95		.0024	.00096	.0005
100		.0036	.0011	.00052
105		.0057	.0013	.00055
110			.0015	.00059
115			.0018	.00063
120			.0022	.00068
125			.0028	.00075
130				.00083
135				.00093
140				.0011
145				.0012
150				.0014

NOTE: The models are valid only if T_{HS} is not above the temperature rating for a given insulation class.

1. $\lambda_b = .000335 \exp\left(\frac{T_{HS} + 273}{329}\right)^{15.6}$ MIL-C-15305 Insulation Class O.*

2. $\lambda_b = .000379 \exp\left(\frac{T_{HS} + 273}{352}\right)^{14}$ MIL-C-15305 Insulation Class A and MIL-C-39010 Insulation Class A.*

3. $\lambda_b = .000319 \exp\left(\frac{T_{HS} + 273}{364}\right)^{8.7}$ MIL-C-15305 Insulation Class B and MIL-C-39010 Insulation Class B.*

4. $\lambda_b = .00035 \exp\left(\frac{T_{HS} + 273}{409}\right)^{10}$ MIL-C-15305 Insulation Class C and MIL-C-39010 Insulation Class F.*

T_{HS} = Hot Spot Temperature (°C), See Section 11.3.

*Refer to Coil Application Note for Determination of Insulation Class.

Construction Factor - π_C

Construction	π_C
Fixed	1
Variable	2

Quality Factor - π_Q

Quality	π_Q
S	.03
R	.10
P	.30
M	1.0
MIL-C-15305	4.0
Lower	20

11.2 INDUCTIVE DEVICES, COILS

Environment Factor - π_E

Environment	π_E
G_B	1.0
G_F	4.0
G_M	12
N_S	5.0
N_U	16
A_{IC}	5.0
A_{IF}	7.0
A_{UC}	6.0
A_{UF}	8.0
A_{RW}	24
S_F	.50
M_F	13
M_L	34
C_L	610

COIL APPLICATION NOTE: Insulation Class Determination From Part Designation

MIL-C-15305. All parts in this specification are R.F. coils. An example type designation is:

LT	4	K	001
MIL-C-15305	Insulation Class Code	Family	

The codes used for the Insulation Class are:

Class C: 1, 2, 3
Class B: 4, 5, 6
Class O: 7, 8, 9
Class A: 10, 11, 12

MIL-C-39010. An example type designation per this specification is:

M	39010/01	A
Military Designator	Document Sheet Number	Insulation Class

11.3 INDUCTIVE DEVICES, DETERMINATION OF HOT SPOT TEMPERATURE

Hot Spot temperature can be estimated as follows:

$$T_{HS} = T_A + 1.1\ (\Delta T)$$

where:

T_{HS} = Hot Spot Temperature (°C)
T_A = Inductive Device Ambient Operating Temperature (°C)
ΔT = Average Temperature Rise Above Ambient (°C)

ΔT can either be determined by the appropriate "Temperature Rise" Test Method paragraph in the device base specification (e.g., paragraph 4.8.12 for MIL-T-27E), or by approximation using one of the procedures described below.

ΔT Approximation

Information Known	ΔT Approximation
1. MIL-C-39010 Slash Sheet Number MIL-C-39010/1C-3C, 5C, 7C, 9A, 10A, 13, 14	$\Delta T = 15°C$
MIL-C-39010/4C, 6C, 8A, 11, 12	$\Delta T = 35°C$
2. Power Loss Case Radiating Surface Area	$\Delta T = 125\ W_L/A$
3. Power Loss Transformer Weight	$\Delta T = 11.5\ W_L/(Wt.)^{.6766}$
4. Input Power Transformer Weight (Assumes 80% Efficiency)	$\Delta T = 2.1\ W_I/(Wt.)^{.6766}$

W_L = Power Loss (W)

A = Radiating Surface Area of Case (in^2). See below for MIL-T-27 Case Areas

Wt. = Transformer Weight (lbs.)

W_I = Input Power (W)

NOTE: Methods are listed in preferred order (i.e., most to least accurate). MIL-C-39010 are micro-miniature devices with surface areas less than 1 in^2. Equations 2-4 are applicable to devices with surface areas from 3 in^2 to 150 in^2. Do not include the mounting surface when determining radiating surface area.

MIL-T-27 Case Radiating Areas (Excludes Mounting Surface)

Case	Area (in^2)	Case	Area (in^2)	Case	Area (in^2)
AF	4	GB	33	LB	82
AG	7	GA	43	LA	98
AH	11	HB	42	MB	98
AJ	18	HA	53	MA	115
EB	21	JB	58	NB	117
EA	23	JA	71	NA	139
FB	25	KB	72	OA	146
FA	31	KA	84		

12.1 ROTATING DEVICES, MOTORS

The following failure-rate model applies to motors with power ratings below one horsepower. This model is applicable to polyphase, capacitor start and run and shaded pole motors. It's application may be extended to other types of fractional horsepower motors utilizing rolling element grease packed bearings. The model is dictated by two failure modes, bearing failures and winding failures. Application of the model to D.C. brush motors assumes that brushes are inspected and replaced and are not a failure mode. Typical applications include fans and blowers as well as various other motor applications. The model is based on Reference 4, which contains a more comprehensive treatment of motor life prediction methods. The reference should be reviewed when bearing loads exceed 10 percent of rated load, speeds exceed 24,000 rpm or motor loads include motor speed slip of greater than 25 percent.

The instantaneous failure rates, or hazard rates, experienced by motors are not constant but increase with time. The failure rate model in this section is an average failure rate for the motor operating over time period "t". The motor operating time period (t-hours) is selected by the analyst. Each motor must be replaced when it reaches the end of this period to make the calculated λ_p valid. The average failure rate, λ_p, has been obtained by dividing the cumulative hazard rate by t, and can be treated as a constant failure rate and added to other part failure rates from this Handbook.

$$\lambda_p = \left[\frac{t^2}{\alpha_B{}^3} + \frac{1}{\alpha_W} \right] \times 10^6 \text{ Failures}/10^6 \text{ Hours}$$

Bearing & Winding Characteristic Life - α_B and α_W

T_A (°C)	α_B (Hr.)	α_W (Hr.)	T_A (°C)	α_B (Hr.)	α_W (Hr.)
-40	310	1.9e+08	55	44000	2.3e+05
-35	310	1.2e+08	60	35000	1.8e+05
-30	330	7.4e+07	65	27000	1.4e+05
-25	370	4.7e+07	70	22000	1.1e+05
-20	460	3.1e+07	75	17000	8.8e+04
-15	660	2.0e+07	80	14000	7.0e+04
-10	1100	1.4e+07	85	11000	5.7e+04
-5	1900	9.2e+06	90	9100	4.6e+04
0	3600	6.4e+06	95	7400	3.8e+04
5	6700	4.5e+06	100	6100	3.1e+04
10	13000	3.2e+06	105	5000	2.5e+04
15	23000	2.3e+06	110	4200	2.1e+04
20	39000	1.6e+06	115	3500	1.8e+04
25	60000	1.2e+06	120	2900	1.5e+04
30	78000	8.9e+05	125	2400	1.2e+04
35	86000	6.6e+05	130	2100	1.0e+04
40	80000	5.0e+05	135	1700	8.9e+03
45	68000	3.8e+05	140	1500	7.5e+03
50	55000	2.9e+-5			

$$\alpha_B = \left[10^{\left(2.534 - \frac{2357}{T_A + 273}\right)} + \frac{1}{10^{\left(20 - \frac{4500}{T_A + 273}\right)} + 300} \right]^{-1}$$

$$\alpha_W = 10^{\left[\frac{2357}{T_A + 273} - 1.83\right]}$$

α_B = Weibull Characteristic Life for the Motor Bearing

α_W = Weibull Characteristic Life for the Motor Windings

T_A = Ambient Temperature (°C)

t = Motor Operating Time Period (Hours)

NOTE: See next page for method to calculate α_B and α_W when temperature is not constant.

12.1 ROTATING DEVICES, MOTORS

$\alpha_{Calculation}$ for Cycled Temperature

The following equation can be used to calculate a weighted characteristic life for both bearings and windings (e.g., for bearings substitute α_B for all α's in equation).

$$\alpha = \frac{(h_1 + h_2 + h_3 + \cdots\cdots h_m)}{\frac{h_1}{\alpha_1} + \frac{h_2}{\alpha_2} + \frac{h_3}{\alpha_3} + \cdots\cdots \frac{h_m}{\alpha_m}}$$

where:

α = either α_B or α_W

h_1 = Time at Temperature T_1

h_2 = Time to Cycle From Temperature T_1 to T_3

h_3 = Time at Temperature T_3

h_m = Time at Temperature T_m

α_1 = Bearing (or Winding) Life at T_1

α_2 = Bearing (or Winding) Life at T_2

NOTE: $T_2 = \frac{T_1 + T_3}{2}$, $T_4 = \frac{T_3 + T_1}{2}$

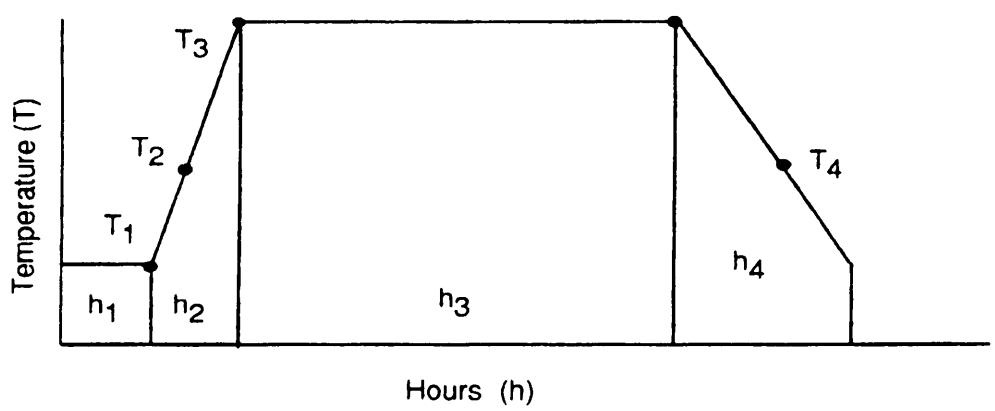

Thermal Cycle

12.2 ROTATING DEVICES, SYNCHROS AND RESOLVERS

DESCRIPTION

Rotating Synchros and Resolvers

$$\lambda_p = \lambda_b \pi_S \pi_N \pi_E \text{ Failures}/10^6 \text{ Hours}$$

NOTE: Synchros and resolvers are predominately used in service requiring only slow and infrequent motion. Mechanical wearout problems are infrequent so that the electrical failure mode dominates, and no mechanical mode failure rate is required in the model above.

Base Failure Rate - λ_b

T_F (°C)	λ_b	T_F (°C)	λ_b
30	.0083	85	.032
35	.0088	90	.041
40	.0095	95	.052
45	.010	100	.069
50	.011	105	.094
55	.013	110	.13
60	.014	115	.19
65	.016	120	.29
70	.019	125	.45
75	.022	130	.74
80	.027	135	1.3

$$\lambda_b = .00535 \exp\left(\frac{T+273}{334}\right)^{8.5}$$

T_F = Frame Temperature (°C)

If Frame Temperature is Unknown Assume T_F = 40 °C + Ambient Temperature

Number of Brushes Factor - π_N

Number of Brushes	π_N
2	1.4
3	2.5
4	3.2

Environment Factor - π_E

Environment	π_E
G_B	1.0
G_F	2.0
G_M	12
N_S	7.0
N_U	18
A_{IC}	4.0
A_{IF}	6.0
A_{UC}	16
A_{UF}	25
A_{RW}	26
S_F	.50
M_F	14
M_L	36
C_L	680

Size Factor - π_S

DEVICE TYPE	π_S		
	Size 8 or Smaller	Size 10-16	Size 18 or Larger
Synchro	2	1.5	1
Resolver	3	2.25	1.5

12.3 ROTATING DEVICES, ELAPSED TIME METERS

DESCRIPTION
Elapsed Time Meters

$$\lambda_p = \lambda_b \pi_T \pi_E \text{ Failures}/10^6 \text{ Hours}$$

Base Failure Rate - λ_b

Type	λ_b
A.C.	20
Inverter Driven	30
Commutator D.C.	80

Temperature Stress Factor - π_T

Operating T (°C)/Rated T (°C)	π_T
0 to .5	.5
.6	.6
.8	.8
1.0	1.0

Environment Factor - π_E

Environment	π_E
G_B	1.0
G_F	2.0
G_M	12
N_S	7.0
N_U	18
A_{IC}	5.0
A_{IF}	8.0
A_{UC}	16
A_{UF}	25
A_{RW}	26
S_F	.50
M_F	14
M_L	38
C_L	N/A

Example

Given: Fractional Horsepower Motor operating at a thermal duty cycle of: 2 hours at 100°C, 8 hours at 20°C, 0.5 hours from 100°C to 20°C, and 0.5 hours from 20°C back to 100°C. Find the average failure rate for 4000 hours operating time.

The basic procedure is to first determine operating temperature at each time interval (or averge temperature when traversing from one temperature to another, e.g. $T_2 = (100 + 20)/2 = 60°C$. Determine α_B and α_W at each temperature and then use these values to determine a weighted average α_B and α_W to use in the λ_p equation.

h_1	=	2 hr.	T_1	=	100°C;	α_B	=	6100 hours;	α_W	=	31000 hours
$h_2 = h_4$	=	0.5 hr.	T_2	=	60°C;	α_B	=	35000 hours;	α_W	=	180000 hours
h_3	=	8 hr.	T_3	=	20°C;	α_B	=	39000 hours;	α_W	=	1600000 hours

$$\alpha_B = \frac{2 + 0.5 + 8 + 0.5}{\frac{2}{6100} + \frac{0.5}{35000} + \frac{8}{39000} + \frac{0.5}{35000}} = 19600 \text{ hours}$$

$$\alpha_W = \frac{2 + 0.5 + 8 + 0.5}{\frac{2}{31000} + \frac{0.5}{180000} + \frac{8}{1600000} + \frac{0.5}{180000}} = 146000 \text{ hours}$$

$$\lambda_p = \left(\frac{t^2}{\alpha_B{}^3} + \frac{1}{\alpha_W}\right) \times 10^6$$

$$\lambda_p = \left(\frac{(4000)^2}{(19600)^3} + \frac{1}{146000}\right) \times 10^6$$

$$\lambda_p = 9.0 \text{ Failures}/10^6 \text{ Hours}$$

13.1 RELAYS, MECHANICAL

SPECIFICATION
MIL-R-5757
MIL-R-6106
MIL-R-19523
MIL-R-39016
MIL-R-19648
MIL-R-83725
MIL-R-83726 (Except Class C, Solid State Type)

DESCRIPTION
Mechanical Relay

$$\lambda_p = \lambda_b \pi_L \pi_C \pi_{CYC} \pi_F \pi_Q \pi_E \text{ Failures}/10^6 \text{ Hours}$$

Base Failure Rate - λ_b

T_A (°C)	Rated Temperature 85°C[1]	Rated Temperature 125°C[2]
25	.0060	.0059
30	.0061	.0060
35	.0063	.0061
40	.0065	.0062
45	.0068	.0064
50	.0072	.0066
55	.0077	.0068
60	.0084	.0071
65	.0094	.0074
70	.011	.0079
75	.013	.0083
80	.016	.0089
85	.020	.0097
90		.011
95		.012
100		.013
105		.015
110		.018
115		.021
120		.025
125		.031

1. $\lambda_b = .00555 \exp\left(\frac{T_A + 273}{352}\right)^{15.7}$

2. $\lambda_b = .0054 \exp\left(\frac{T_A + 273}{377}\right)^{10.4}$

T_A = Ambient Temperature (°C)

Contact Form Factor - π_C
(Applies to Active Conducting Contacts)

Contact Form	π_C
SPST	1.00
DPST	1.50
SPDT	1.75
3PST	2.00
4PST	2.50
DPDT	3.00
3PDT	4.25
4PDT	5.50
6PDT	8.00

Load Stress Factor - π_L

S	Load Type: Resistive[1]	Load Type: Inductive[2]	Load Type: Lamp[3]
.05	1.00	1.02	1.06
.10	1.02	1.06	1.28
.20	1.06	1.28	2.72
.30	1.15	1.76	9.49
.40	1.28	2.72	54.6
.50	1.48	4.77	
.60	1.76	9.49	
.70	2.15	21.4	
.80	2.72		
.90	3.55		
1.00	4.77		

1. $\pi_L = \exp\left(\frac{S}{.8}\right)^2$

2. $\pi_L = \exp\left(\frac{S}{.4}\right)^2$

3. $\pi_L = \exp\left(\frac{S}{.2}\right)^2$

$S = \frac{\text{Operating Load Current}}{\text{Rated Resistive Load Current}}$

For single devices which switch two different load types, evaluate π_L for each possible stress load type combination and use the worse case (largest π_L).

Cycling Factor - π_{CYC}

Cycle Rate (Cycles per Hour)	π_{CYC} (MIL-SPEC)
	Cycles per Hour
≥ 1.0	10
< 1.0	0.1

Cycle Rate (Cycles per Hour)	π_{CYC} (Lower Quality)
> 1000	$\left(\frac{\text{Cycles per Hour}}{100}\right)^2$
	Cycles per Hour
10 - 1000	10
< 10	1.0

NOTE: Values of π_{CYC} for cycling rates beyond the basic design limitations of the relay are not valid. Design specifications should be consulted prior to evaluation of π_{CYC}.

13.1 RELAYS, MECHANICAL

Quality Factor - π_Q

Quality	π_Q
R	.10
P	.30
X	.45
U	.60
M	1.0
L	1.5
Non-Est. Rel.	3.0

Environment Factor - π_E

	π_E	
Environment	MIL-SPEC	Lower Quality
G_B	1.0	2.0
G_F	2.0	5.0
G_M	15	44
N_S	8.0	24
N_U	27	78
A_{IC}	7.0	15
A_{IF}	9.0	20
A_{UC}	11	28
A_{UF}	12	38
A_{RW}	46	140
S_F	.50	1.0
M_F	25	72
M_L	68	200
C_L	N/A	N/A

Application and Construction Factor - π_F

Contact Rating	Application Type	Construction Type	π_F MIL-SPEC	π_F Lower Quality
Signal Current (Low mv and ma)	Dry Circuit	Armature (Long)	4	8
		Dry Reed	6	18
		Mercury Wetted	1	3
		Magnetic Latching	4	8
		Balanced Armature	7	14
		Solenoid	7	14
0-5 Amp	General Purpose	Armature (Long)	3	6
		Balanced Armature	5	10
		Solenoid	6	12
	Sensitive (0 - 100 mw)	Armature (Long and Short)	5	10
		Mercury Wetted	2	6
		Magnetic Latching	6	12
		Meter Movement	100	100
		Balanced Armature	10	20
	Polarized	Armature (Short)	10	20
		Meter Movement	100	100
	Vibrating Reed	Dry Reed	6	12
		Mercury Wetted	1	3
	High Speed	Armature (Balanced and Short)	25	NA
		Dry Reed	6	NA
	Thermal Time Delay	Bimetal	10	20
	Electronic Time Delay, Non-Thermal		9	12
	Latching, Magnetic	Dry Reed	10	20
		Mercury Wetted	5	10
		Balanced Aramture	5	10
5-20 Amp	High Voltage	Vacuum (Glass)	20	40
		Vacuum (Ceramic)	5	10
	Medium Power	Armature (Long and Short)	3	6
		Mercury Wetted	1	3
		Magnetic Latching	2	6
		Mechanical Latching		
		Balanced Armature	3	6
		Solenoid	2	6
			2	6
25-600 Amp	Contactors (High Current)	Armature (Short)	7	14
		Mechanical Latching	12	24
		Balanced Armature	10	20
		Solenoid	5	10

13.2 RELAYS, SOLID STATE AND TIME DELAY

SPECIFICATION
MIL-R-28750
MIL-R-83726

DESCRIPTION
Relay, Solid State
Relay, Time Delay, Hybrid and Solid State

The most accurate method for predicting the failure rate of solid state (and solid state time delay) relays is to sum the failure rates for the individual components which make up the relay. The individual component failure rates can either be calculated from the models provided in the main body of this Handbook (Parts Stress Method) or from the Parts Count Method shown in Appendix A, depending upon the depth of knowledge the analyst has about the components being used. If insufficient information is available, the following default model can be used:

$$\lambda_p = \lambda_b \pi_Q \pi_E \text{ Failures}/10^6 \text{ Hours}$$

Base Failure Rate - λ_b

Relay Type	λ_b
Solid State	.40
Solid State Time Delay	.50
Hybrid	.50

Quality Factor - π_Q

Quality	π_Q
MIL-SPEC	1.0
Lower	4.0

Environment Factor - π_E

Environment	π_E
G_B	1.0
G_F	3.0
G_M	12
N_S	6.0
N_U	17
A_{IC}	12
A_{IF}	19
A_{UC}	21
A_{UF}	32
A_{RW}	23
S_F	.40
M_F	12
M_L	33
C_L	590

14.1 SWITCHES, TOGGLE OR PUSHBUTTON

SPECIFICATION
MIL-S-3950
MIL-S-8805
MIL-S-8834
MIL-S-22885
MIL-S-83731

DESCRIPTION
Snap-action, Toggle or Pushbutton, Single Body

$$\lambda_p = \lambda_b \pi_{CYC} \pi_L \pi_C \pi_E \text{ Failures}/10^6 \text{ Hours}$$

Base Failure Rate - λ_b

Description	MIL-SPEC	Lower Quality
Snap-action	.00045	.034
Non-snap Action	.0027	.040

Cycling Factor - π_{CYC}

Switching Cycles per Hour	π_{CYC}
≤ 1 Cycle/Hour	1.0
> 1 Cycle/Hour	Number of Cycles/Hour

Load Stress Factor - π_L

Stress S	Load Type		
	Resistive	Inductive	Lamp
0.05	1.00	1.02	1.06
0.1	1.02	1.06	1.28
0.2	1.06	1.28	2.72
0.3	1.15	1.76	9.49
0.4	1.28	2.72	54.6
0.5	1.48	4.77	
0.6	1.76	9.49	
0.7	2.15	21.4	
0.8	2.72		
0.9	3.55		
1.0	4.77		

$$S = \frac{\text{Operating Load Current}}{\text{Rated Resistive Load Current}}$$

$\pi_L = \exp(S/.8)^2$ for Resistive Load

$\pi_L = \exp(S/.4)^2$ for Inductive Load

$\pi_L = \exp(S/.2)^2$ for Lamp Load

NOTE: When the switch is rated by inductive load, then use resistive π_L.

Contact Form and Quantity Factor - π_C

Contact Form	π_C
SPST	1.0
DPST	1.5
SPDT	1.7
3PST	2.0
4PST	2.5
DPDT	3.0
3PDT	4.2
4PDT	5.5
6PDT	8.0

Environment Factor - π_E

Environment	π_E
G_B	1.0
G_F	3.0
G_M	18
N_S	8.0
N_U	29
A_{IC}	10
A_{IF}	18
A_{UC}	13
A_{UF}	22
A_{RW}	46
S_F	.50
M_F	25
M_L	67
C_L	1200

14.2 SWITCHES, BASIC SENSITIVE

SPECIFICATION
MIL-S-8805

DESCRIPTION
Basic Sensitive

$$\lambda_p = \lambda_b \pi_{CYC} \pi_L \pi_E \text{ Failures}/10^6 \text{ Hours}$$

Base Failure Rate - λ_b

$\lambda_b = \lambda_{bE} + n\,\lambda_{bC}$ (if Actuation Differential is > 0.002 inches)

$\lambda_b = \lambda_{bE} + n\,\lambda_{b0}$ (if Actuation Differential is ≤ 0.002 inches)

n = Number of Active Contacts

Description	MIL-SPEC	Lower Quality
λ_{bE}	.10	.10
λ_{bC}	.00045	.23
λ_{b0}	.0009	.63

Cycling Factor - π_{CYC}

Switching Cycles per Hour	π_{CYC}
≤ 1 Cycle/Hour	1.0
> 1 Cycle/Hour	Number of Cycles/Hour

Load Stress Factor - π_L

Stress S	Load Type		
	Resistive	Inductive	Lamp
0.05	1.00	1.02	1.06
0.1	1.02	1.06	1.28
0.2	1.06	1.28	2.72
0.3	1.15	1.76	9.49
0.4	1.28	2.72	54.6
0.5	1.48	4.77	
0.6	1.76	9.49	
0.7	2.15	21.4	
0.8	2.72		
0.9	3.55		
1.0	4.77		

$$S = \frac{\text{Operating Load Current}}{\text{Rated Resistive Load Current}}$$

$\pi_L = \exp(S/.8)^2$ for Resistive Load

$\pi_L = \exp(S/.4)^2$ for Inductive Load

$\pi_L = \exp(S/.2)^2$ for Lamp Load

NOTE: When the Switch is Rated by Inductive Load, then use Resistive π_L.

Environment Factor - π_E

Environment	π_E
G_B	1.0
G_F	3.0
G_M	18
N_S	8.0
N_U	29
A_{IC}	10
A_{IF}	18
A_{UC}	13
A_{UF}	22
A_{RW}	46
S_F	.50
M_F	25
M_L	67
C_L	1200

SPECIFICATION
MIL-S-3786

DESCRIPTION
Rotary, Ceramic or Glass Wafer, Silver Alloy Contacts

$$\lambda_p = \lambda_b \pi_{CYC} \pi_L \pi_E \text{ Failures}/10^6 \text{ Hours}$$

Base Failure Rate - λ_b

Base failure rate model (λ_b):

$\lambda_b = \lambda_{bE} + n\lambda_{bF}$ (for Ceramic RF Wafers)

$\lambda_b = \lambda_{bE} + n\,\lambda_{bG}$ (for Rotary Switch Medium Power Wafers)

n = Number of Active Contacts

Description	MIL-SPEC	Lower Quality
λ_{bE}	.0067	.10
λ_{bF}	.00003	.02
λ_{bG}	.00003	.06

Load Stress Factor - π_L

Stress S	Load Type		
	Resistive	Inductive	Lamp
0.05	1.00	1.02	1.06
0.1	1.02	1.06	1.28
0.2	1.06	1.28	2.72
0.3	1.15	1.76	9.49
0.4	1.28	2.72	54.6
0.5	1.48	4.77	
0.6	1.76	9.49	
0.7	2.15	21.4	
0.8	2.72		
0.9	3.55		
1.0	4.77		

$$S = \frac{\text{Operating Load Current}}{\text{Rated Resistive Load Current}}$$

$\pi_L = \exp(S/.8)^2$ for Resistive Load

$\pi_L = \exp(S/.4)^2$ for Inductive Load

$\pi_L = \exp(S/.2)^2$ for Lamp Load

NOTE: When the Switch is Rated by Inductive Load, then use Resistive π_L.

Cycling Factor - π_{CYC}

Switching Cycles per Hour	π_{CYC}
≤ 1 Cycle/Hour	1.0
> 1 Cycle/Hour	Number of Cycles/Hour

Environment Factor - π_E

Environment	π_E
G_B	1.0
G_F	3.0
G_M	18
N_S	8.0
N_U	29
A_{IC}	10
A_{IF}	18
A_{UC}	13
A_{UF}	22
A_{RW}	46
S_F	.50
M_F	25
M_L	67
C_L	1200

14.4 SWITCHES, THUMBWHEEL

SPECIFICATION
MIL-S-22710
Line

DESCRIPTION
Switches, Rotary (Printed Circuit) (Thumbwheel, In- and Pushbutton)

$$\lambda_p = (\lambda_{b1} + \pi_N \lambda_{b2})\, \pi_{CYC} \pi_L \pi_E \text{ Failures}/10^6 \text{ Hours}$$

CAUTION: This model applies to the switching function only. The model does not consider the contribution of any discrete components (e.g., resistors, diodes, lamp) which may be mounted on the switch. If significant (relative to the switch failure rate), the failure rate of these devices must be calculated using the appropriate section of this Handbook and added to the failure rate of the switch.

This model applies to a single switch section. This type of switch is frequently ganged to provide the required function. The model must be applied to each section individually.

Base Failure Rate - λ_{b1} and λ_{b2}

Description	MIL-SPEC	Lower Quality
λ_{b1}	.0067	.086
λ_{b2}	.062	.089

Number of Active Contacts Factor - π_N

π_N = Number of Active Contacts

Load Stress Factor - π_L

Stress S	Load Type		
	Resistive	Inductive	Lamp
0.05	1.00	1.02	1.06
0.1	1.02	1.06	1.28
0.2	1.06	1.28	2.72
0.3	1.15	1.76	9.49
0.4	1.28	2.72	54.6
0.5	1.48	4.77	
0.6	1.76	9.49	
0.7	2.15	21.4	
0.8	2.72		
0.9	3.55		
1.0	4.77		

$$S = \frac{\text{Operating Load Current}}{\text{Rated Resistive Load Current}}$$

$\pi_L = \exp(S/.8)^2$ for Resistive Load

$\pi_L = \exp(S/.4)^2$ for Inductive Load

$\pi_L = \exp(S/.2)^2$ for Lamp Load

NOTE: When the Switch is Rated by Inductive Load, then use Resistive π_L.

Cycling Factor - π_{CYC}

Switching Cycles per Hour	π_{CYC}
≤ 1 Cycle/Hour	1.0
> 1 Cycle/Hour	Number of Cycles/Hour

Environment Factor - π_E

Environment	π_E
G_B	1.0
G_F	3.0
G_M	18
N_S	8.0
N_U	29
A_{IC}	10
A_{IF}	18
A_{UC}	13
A_{UF}	22
A_{RW}	46
S_F	.50
M_F	25
M_L	67
C_L	1200

14.5 SWITCHES, CIRCUIT BREAKERS

SPECIFICATION
MIL-C-55629
MIL-C-83383
MIL-C-39019
W-C-375

DESCRIPTION
Circuit Breakers, Magnetic, Unsealed, Trip-Free
Circuit Breakers, Remote Control, Thermal, Trip-Free
Circuit Breakers, Magnetic, Low Power, Sealed, Trip-Free Service
Circuit Breakers, Molded Case, Branch Circuit and Service

$$\lambda_p = \lambda_b \pi_C \pi_U \pi_Q \pi_E \text{ Failures}/10^6 \text{ Hours}$$

Base Failure Rate - λ_b

Description	λ_b
Magnetic	.020
Thermal	.038
Thermal-Magnetic	.038

Quality Factor - π_Q

Quality	π_Q
MIL-SPEC	1.0
Lower	8.4

Configuration Factor - π_C

Configuration	π_C
SPST	1.0
DPST	2.0
3PST	3.0
4PST	4.0

Use Factor - π_U

Use	π_U
Not Used as a Power On/Off Switch	1.0
Also Used as a Power On/Off Switch	10

Environment Factor - π_E

Environment	π_E
G_B	1.0
G_F	2.0
G_M	15
N_S	8.0
N_U	27
A_{IC}	7.0
A_{IF}	9.0
A_{UC}	11
A_{UF}	12
A_{RW}	46
S_F	.50
M_F	25
M_L	66
C_L	N/A

15.1 CONNECTORS, GENERAL (EXCEPT PRINTED CIRCUIT BOARD)

SPECIFICATION*	DESCRIPTION
MIL-C-24308	Rack and Panel
MIL-C-28748	
MIL-C-28804	
MIL-C-83513	
MIL-C-83733	
MIL-C-5015	Circular
MIL-C-26482	
MIL-C-28840	
MIL-C-38999	
MIL-C-81511	
MIL-C-83723	

SPECIFICATION*	DESCRIPTION
MIL-C-3607	Coaxial, RF
MIL-C-3643	
MIL-C-3650	
MIL-C-3655	
MIL-C-25516	
MIL-C-39012	
MIL-C-55235	
MIL-C-55339	
MIL-C-3767	Power
MIL-C-22992	
MIL-C-49142	Triaxial, RF

* NOTE: See following page for connector configurations.

$$\lambda_p = \lambda_b \pi_K \pi_P \pi_E \text{ Failures}/10^6 \text{ Hours}$$

APPLICATION NOTE: The failure rate model is for a mated pair of connectors. It is sometimes desirable to assign half of the overall mated pair connector (i.e., single connector) failure rate to the line replaceable unit and half to the chassis (or backplane). An example of when this would be beneficial is for input to maintainability prediction to allow a failure rate weighted repair time to be estimated for both the LRU and chassis. This accounting procedure could be significant if repair times for the two halves of the connector are substantially different. For a single connector divide λ_p by two.

Base Failure Rate - λ_b

T_o (°C)	Insert Material* A[1]	B[2]	C[3]	D[4]
0	.00006	.00025	.0021	.0038
10	.00008	.00033	.0026	.0048
20	.00009	.00044	.0032	.0062
30	.00011	.00057	.0040	.0078
40	.00014	.00073	.0048	.0099
50	.00016	.00093	.0059	.013
60	.00020	.0012	.0071	.016
70	.00023	.0015	.0087	.020
80	.00027	.0019	.011	.026
90	.00032	.0023	.013	.033
100	.00037	.0029	.016	.043
110	.00043	.0036	.020	.056
120	.00050	.0045	.024	.074
130	.00059	.0056		
140	.00069	.0070		
150	.00080	.0087		
160	.00094	.011		
170	.0011	.014		
180	.0013	.018		
190	.0016	.022		
200	.0019	.029		
210	.0023			
220	.0028			
230	.0034			
240	.0042			
250	.0053			

* If a mating pair of connectors uses two types of insert materials, use the average of the base failure rates for the two insert material types. See following page for insert material determination.

Base Failure Rate - λ_b (cont'd)

1. $$\lambda_b = .020 \exp\left(\left(\frac{-1592.0}{T_o + 273}\right) + \left(\frac{T_o + 273}{473}\right)^{5.36}\right)$$

2. $$\lambda_b = .431 \exp\left(\left(\frac{-2073.6}{T_o + 273}\right) + \left(\frac{T_o + 273}{423}\right)^{4.66}\right)$$

3. $$\lambda_b = .190 \exp\left(\left(\frac{-1298.0}{T_o + 273}\right) + \left(\frac{T_o + 273}{373}\right)^{4.25}\right)$$

4. $$\lambda_b = .770 \exp\left(\left(\frac{-1528.8}{T_o + 273}\right) + \left(\frac{T_o + 273}{358}\right)^{4.72}\right)$$

T_o = Internal Contact Operating Temperature (°C)

T_o = Connector Ambient Temperature + Insert Temperature Rise

See following page for Insert Temperature Rise Determination.

15.1 CONNECTORS, GENERAL (EXCEPT PRINTED CIRCUIT BOARD)

Insert Material Determination

Configuration	Specification	Possible Insert Materials A	B	C	D
Rack and Panel	MIL-C-28748		X		
	MIL-C-83733		X		
	MIL-C-24308	X	X		
	MIL-C-28804	X	X		
	MIL-C-83513	X	X		
Circular	MIL-C-5015		X		X
	MIL-C-26482	X	X		X
	MIL-C-28840	X	X		
	MIL-C-38999	X	X		
	MIL-C-81511		X		
	MIL-C-83723		X		
Power	MIL-C-3767		X		X
	MIL-C-22992		X		X
Coaxial	MIL-C-3607			X	
	MIL-C-3643			X	
	MIL-C-3650			X	
	MIL-C-3655			X	
	MIL-C-25516			X	
	MIL-C-39012			X	
	MIL-C-55235			X	
	MIL-C-55339		X	X	
Triaxial	MIL-C-49142		X	X	

Insert Material Type	Common Insert Materials	Temperature Range (°C)*
A	Vitreous Glass, Alumina Ceramic, Polyimide	-55 to 250
B	Diallylphtalate, Melamine, Fluorosilicione, Silicone Rubber, Polysulfone, Epoxy Resin	-55 to 200
C	Polytetrafluorethylene (Teflon), Chlorotrifluorethylene (Kel-f)	-55 to 125
D	Polyamide (Nylon), Polychloroprene (Neoprene), Polyethylene	-55 to 125

*These temperature ranges indicate maximum capability of the insert material only. Connectors using these materials generally have a reduced temperature range caused by other considerations of connector design. Applicable connector specifications contain connector operating temperature range.

Insert Temperature Rise (ΔT °C) Determination

Amperes Per Contact	Contact Gauge 22	20	16	12
2	4	2	1	0
3	8	5	2	1
4	13	8	4	1
5	19	13	5	2
6	27	18	8	3
7	36	23	10	4
8	46	30	13	5
9	57	37	16	6
10	70	45	19	7
15		96	41	15
20			70	26
25			106	39
30				54
35				72
40				92

$\Delta T = 0.989\ (i)^{1.85}$ 22 Gauge Contacts

$\Delta T = 0.640\ (i)^{1.85}$ 20 Gauge Contacts

$\Delta T = 0.274\ (i)^{1.85}$ 16 Gauge Contacts

$\Delta T = 0.100\ (i)^{1.85}$ 12 Gauge Contacts

ΔT = Insert Temperature Rise
i = Amperes per Contact

RF Coaxial Connectors $\Delta T = 5°C$

RF Coaxial Connectors (High Power Applications) $\Delta T = 50°C$

Mating/Unmating Factor - π_K

Mating/Unmating Cycles* (per 1000 hours)	π_K
0 to .05	1.0
> .05 to .5	1.5
> .5 to 5	2.0
> 5 to 50	3.0
> 50	4.0

*One cycle includes both connect and disconnect.

15.1 CONNECTORS, GENERAL (EXCEPT PRINTED CIRCUIT BOARD)

Active Pins Factor - π_P

Number of Active Contacts	π_P	Number of Active Contacts	π_P
1	1.0	65	13
2	1.4	70	15
3	1.6	75	16
4	1.7	80	18
5	1.9	85	19
6	2.0	90	21
7	2.2	95	23
8	2.3	100	25
9	2.4	105	27
10	2.6	110	30
11	2.7	115	32
12	2.9	120	35
13	3.0	125	37
14	3.1	130	40
15	3.3	135	43
16	3.4	140	46
17	3.6	145	50
18	3.7	150	53
19	3.9	155	57
20	4.0	160	61
25	4.8	165	65
30	5.6	170	69
35	6.5	175	74
40	7.4	180	78
45	8.4	185	83
50	9.5	190	89
55	11	195	94
60	12	200	100

$$\pi_P = \exp\left(\frac{N-1}{10}\right)^q$$

$q = 0.51064$

N = Number of Active Contacts

An active contact is the conductive element in a connector which mates with another element for the purpose of transferring electrical energy. For coaxial and triaxial connectors, the shield contact is counted as an active contact.

Environment Factor - π_E

	π_E	
Environment	MIL-SPEC	Lower Quality
G_B	1.0	2.0
G_F	1.0	5.0
G_M	8.0	21
N_S	5.0	10
N_U	13	27
A_{IC}	3.0	12
A_{IF}	5.0	18
A_{UC}	8.0	17
A_{UF}	12	25
A_{RW}	19	37
S_F	.50	.80
M_F	10	20
M_L	27	54
C_L	490	970

15.2 CONNECTORS, PRINTED CIRCUIT BOARD

SPECIFICATION
MIL-C-21097
MIL-C-55302

DESCRIPTION
One-Piece Connector
Two-Piece Connector

$$\lambda_p = \lambda_b \pi_K \pi_P \pi_E \text{ Failures}/10^6 \text{ Hours}$$

Base Failure Rate - λ_b

T_o (°C)	λ_b	T_o (°C)	λ_b
0	.00012	110	.0018
10	.00017	120	.0022
20	.00022	130	.0028
30	.00028	140	.0035
40	.00037	150	.0044
50	.00047	160	.0055
60	.00059	170	.0069
70	.00075	180	.0088
80	.00093	190	.011
90	.0012	200	.015
100	.0015		

$$\lambda_b = .216 \exp\left(\left(\frac{-2073.6}{T_o + 273}\right) + \left(\frac{T_o + 273}{423}\right)^{4.66}\right)$$

T_o = Internal Contact Operating Temperature (°C)

Connector Temperature Rise (ΔT °C) Determination

Amperes Per Contact	Contact Guage 26	22	20
1	2	1	1
2	8	4	2
3	16	8	5
4	27	13	8
5	41	19	13

$\Delta T = 2.100\ (i)^{1.85}$ 26 Guage Contacts
$\Delta T = 0.989\ (i)^{1.85}$ 22 Guage Contacts
$\Delta T = 0.640\ (i)^{1.85}$ 20 Guage Contacts

ΔT = Contact Temperature Rise

i = Amperes per Contact

Mating/Unmating Factor - π_K

Mating/Unmating Cycles* (Per1000 Hours)	π_K
0 to .05	1.0
> .05 to .5	1.5
> .5 to 5	2.0
> 5 to 50	3.0
> 50	4.0

* A cycle is defined as the mating and unmating of a connector.

15.2 CONNECTORS, PRINTED CIRCUIT BOARD

Active Pins Factor - π_P

Number of Active Contacts	π_P	Number of Active Contacts	π_P
1	1.0	65	13
2	1.4	70	15
3	1.6	75	16
4	1.7	80	18
5	1.9	85	19
6	2.0	90	21
7	2.2	95	23
8	2.3	100	25
9	2.4	105	27
10	2.6	110	30
11	2.7	115	32
12	2.9	120	35
13	3.0	125	37
14	3.1	130	40
15	3.3	135	43
16	3.4	140	46
17	3.6	145	50
18	3.7	150	53
19	3.9	155	57
20	4.0	160	61
25	4.8	165	65
30	5.6	170	69
35	6.5	175	74
40	7.4	180	78
45	8.4	185	83
50	9.5	190	89
55	11	195	94
60	12	200	100

$$\pi_P = \exp\left(\frac{N-1}{10}\right)^q$$

q = 0.51064

N = Number of Active Pins

An active contact is the conductive element which mates with another element for the purpose of transferring electrical energy.

Environment Factor - π_E

	π_E	
Environment	MIL-SPEC	Lower Quality
G_B	1.0	2.0
G_F	3.0	7.0
G_M	8.0	17
N_S	5.0	10
N_U	13	26
A_{IC}	6.0	14
A_{IF}	11	22
A_{UC}	6.0	14
A_{UF}	11	22
A_{RW}	19	37
S_F	.50	.80
M_F	10	20
M_L	27	54
C_L	490	970

15.3 CONNECTORS, INTEGRATED CIRCUIT SOCKETS

SPECIFICATION
MIL-S-83734

DESCRIPTION
IC Sockets, Plug-in

$$\lambda_p = \lambda_b \pi_P \pi_E \text{ Failures/}10^6 \text{ Hours}$$

Base Failure Rate - λ_b

Type	λ_b
All MIL-S-83734	.00042

Active Pins Factor - π_P

Number of Active Contacts	π_P
6	2.0
8	2.3
10	2.6
14	3.1
16	3.4
18	3.7
20	4.0
22	4.3
24	4.6
28	5.3
36	6.7
40	7.4
48	9.1
50	9.5
64	13

$$\pi_P = \exp\left(\frac{N-1}{10}\right)^q$$

q = 0.51064

N = Number of Active Contacts

An active contact is the conductive element which mates with another element for the purpose of transferring electrical energy.

Environment Factor - π_E

Environment	π_E
G_B	1.0
G_F	3.0
G_M	14
N_S	6.0
N_U	18
A_{IC}	8.0
A_{IF}	12
A_{UC}	11
A_{UF}	13
A_{RW}	25
S_F	.50
M_F	14
M_L	36
C_L	650

16.1 INTERCONNECTION ASSEMBLIES WITH PLATED THROUGH HOLES

DESCRIPTION
Circuit Boards, Printed (PCBs) and Discrete Wiring

$$\lambda_p = \lambda_b\left[N_1 \pi_C + N_2 (\pi_C + 13)\right] \pi_Q \pi_E \text{ Failures}/10^6 \text{ Hours}$$

APPLICATION NOTE: For assemblies not using Plated Through Holes (PTH), use Section 17, Connections. A discrete wiring assembly with electroless deposit plated through holes is basically a pattern of insulated wires laid down on an adhesive coated substrate. The primary cause of failure for both printed wiring and discrete wiring assemblies is associated with plated through hole problems (e.g., barrel cracking).

Base Failure Rate - λ_b

Technology	λ_b
Printed Wiring Assembly/Printed Circuit Boards with PTHs	.000041
Discrete Wiring with Electroless Deposited PTH (≤ 2 Levels of Circuitry)	.00026

Quality Factor - π_Q

Quality	π_Q
MIL-SPEC or Comparable Institute for Interconnecting, and Packaging Electronic Circuits (IPC) Standards	1
Lower	2

Number of PTHs Factor - N_1 and N_2

Factor	Quantity
N_1	Quantity of Wave Soldered Functional PTHs
N_2	Quantity of Hand Soldered PTHs

Complexity Factor - π_C

Number of Circuit Planes, P	π_C
≤ 2	1.0
3	1.3
4	1.6
5	1.8
6	2.0
7	2.2
8	2.4
9	2.6
10	2.8
11	2.9
12	3.1
13	3.3
14	3.4
15	3.6
16	3.7
Discrete Wiring w/PTH	1

$\pi_C = .65\ P^{.63}$ $\quad 2 \le P \le 16$

Environment Factor - π_E

Environment	π_E
G_B	1.0
G_F	2.0
G_M	7.0
N_S	5.0
N_U	13
A_{IC}	5.0
A_{IF}	8.0
A_{UC}	16
A_{UF}	28
A_{RW}	19
S_F	.50
M_F	10
M_L	27
C_L	500

17.1 CONNECTIONS

DESCRIPTION
Connections Used on All Assemblies Except Those Using Plated Through Holes (PTH)

APPLICATION NOTE: The failure rate model in this section applies to connections used on all assemblies except those using plated through holes. Use the Interconnection Assembly Model in Section 16 to account for connections to a circuit board using plated through hole technology. The failure rate of the structure which supports the connections and parts, e.g., non-plated-through hole boards and terminal straps, is considered to be zero. Solderless wrap connections are characterized by solid wire wrapped under tension around a post, whereas hand soldering with wrapping does not depend on a tension induced connection. The following model is for a single connection.

$$\lambda_p = \lambda_b \pi_Q \pi_E \text{ Failures}/10^6 \text{ Hours}$$

Base Failure Rate - λ_b

Connection Type	λ_b (F/10^6 hrs)
Hand Solder, w/o Wrapping	.0026
Hand Solder, w/Wrapping	.00014
Crimp	.00026
Weld	.00005
Solderless Wrap	.0000035
Clip Termination	.00012
Reflow Solder	.000069

Quality Factor - π_Q

Quality Grade	π_Q	Comments
Crimp Types		
Automated	1.0	Daily pull tests recommended.
Manual		
Upper	1.0	Only MIL-SPEC or equivalent tools and terminals, pull test at beginning and end of each shift, color coded tools and terminations.
Standard	2.0	MIL-SPEC tools, pull test at beginning of each shift.
Lower	20.0	Anything less than standard criteria.
All Types Except Crimp	1.0	

Environment Factor - π_E

Environment	π_E
G_B	1.0
G_F	2.0
G_M	7.0
N_S	4.0
N_U	11
A_{IC}	4.0
A_{IF}	6.0
A_{UC}	6.0
A_{UF}	8.0
A_{RW}	16
S_F	.50
M_F	9.0
M_L	24
C_L	420

18.1 METERS, PANEL

SPECIFICATION
MIL-M-10304

DESCRIPTION
Meter, Electrical Indicating, Panel Type, Ruggedized

$$\lambda_p = \lambda_b \pi_A \pi_F \pi_Q \pi_E \text{ Failures}/10^6 \text{ Hours}$$

Base Failure Rate - λ_b

Type	λ_b
All	.090

Application Factor - π_A

Application	π_A
Direct Current	1.0
Alternating Current	1.7

Function Factor - π_F

Function	π_F
Ammeter	1.0
Voltmeter	1.0
Other*	2.8

* Meters whose basic meter movement construction is an ammeter with associated conversion elements.

Quality Factor - π_Q

Quality	π_Q
MIL-M-10304	1.0
Lower	3.4

Environment Factor - π_E

Environment	π_E
G_B	1.0
G_F	4.0
G_M	25
N_S	12
N_U	35
A_{IC}	28
A_{IF}	42
A_{UC}	58
A_{UF}	73
A_{RW}	60
S_F	1.1
M_F	60
M_L	N/A
C_L	N/A

19.1 QUARTZ CRYSTALS

SPECIFICATION
MIL-C-3098

DESCRIPTION
Crystal Units, Quartz

$$\lambda_p = \lambda_b \pi_Q \pi_E \text{ Failures}/10^6 \text{ Hours}$$

Base Failure Rate - λ_b

Frequency, f(MHz)	λ_b
0.5	.011
1.0	.013
5.0	.019
10	.022
15	.024
20	.026
25	.027
30	.028
35	.029
40	.030
45	.031
50	.032
55	.033
60	.033
65	.034
70	.035
75	.035
80	.036
85	.036
90	.037
95	.037
100	.037
105	.038
$\lambda_b = .013(f)^{.23}$	

Environment Factor - π_E

Environment	π_E
G_B	1.0
G_F	3.0
G_M	10
N_S	6.0
N_U	16
A_{IC}	12
A_{IF}	17
A_{UC}	22
A_{UF}	28
A_{RW}	23
S_F	.50
M_F	13
M_L	32
C_L	500

Quality Factor - π_Q

Quality	π_Q
MIL-SPEC	1.0
Lower	2.1

SPECIFICATION
MIL-L-6363
W-L-111

DESCRIPTION
Lamps, Incandescent, Aviation Service
Lamps, Incandescent, Miniature, Tungsten-Filament

$$\lambda_p = \lambda_b \pi_U \pi_A \pi_E \text{ Failures}/10^6 \text{ Hours}$$

APPLICATION NOTE: The data used to develop this model included randomly occurring catastrophic failures and failures due to tungsten filament wearout.

Base Failure Rate - λ_b

Rated Voltage, V_r (Volts)	λ_b
5	.59
6	.75
12	1.8
14	2.2
24	4.5
28	5.4
37.5	7.9
$\lambda_b = .074(V_r)^{1.29}$	

Utilization Factor - π_U

Utilization (Illuminate Hours/ Equipment Operate Hours)	π_U
< 0.10	0.10
0.10 to 0.90	0.72
> 0.90	1.0

Application Factor - π_A

Application	π_A
Alternating Current	1.0
Direct Current	3.3

Environment Factor - π_E

Environment	π_E
G_B	1.0
G_F	2.0
G_M	3.0
N_S	3.0
N_U	4.0
A_{IC}	4.0
A_{IF}	4.0
A_{UC}	5.0
A_{UF}	6.0
A_{RW}	5.0
S_F	.70
M_F	4.0
M_L	6.0
C_L	27

21.1 ELECTRONIC FILTERS, NON-TUNABLE

SPECIFICATION
MIL-F-15733
MIL-F-18327

DESCRIPTION
Filters, Radio Frequency Interference
Filters, High Pass, Low Pass, Band Pass, Band Suppression, and Dual Functioning (Non-tunable)

The most accurate way to estimate the failure rate for electronic filters is to sum the failure rates for the individual components which make up the filter (e.g., IC's, diodes, resistors, etc.) using the appropriate models provided in this Handbook. The Parts Stress models or the Parts Count method given in Appendix A can be used to determine individual component failure rates. If insufficient information is available then the following default model can be used.

$$\lambda_p = \lambda_b \pi_Q \pi_E \quad \text{Failures}/10^6 \text{ Hours}$$

Base Failure Rate - λ_b

Type	λ_b
MIL-F-15733, Ceramic-Ferrite Construction (Styles FL 10-16, 22, 24, 30-32, 34, 35, 38, 41-43, 45, 47-50, 61-65, 70, 81-93, 95, 96)	.022
MIL-F-15733, Discrete LC Components, (Styles FL 37, 53, 74)	.12
MIL-F-18327, Discrete LC Components (Composition 1)	.12
MIL-F-18327, Discrete LC and Crystal Components (Composition 2)	.27

Quality Factor - π_Q

Quality	π_Q
MIL-SPEC	1.0
Lower	2.9

Environment Factor - π_E

Environment	π_E
G_B	1.0
G_F	2.0
G_M	6.0
N_S	4.0
N_U	9.0
A_{IC}	7.0
A_{IF}	9.0
A_{UC}	11
A_{UF}	13
A_{RW}	11
S_F	.80
M_F	7.0
M_L	15
C_L	120

22.1 FUSES

SPECIFICATION
W-F-1726
W-F-1814
MIL-F-5372
ML-F-23419
MIL-F-15160

DESCRIPTION
Fuse, Cartridge Class H
Fuse, Cartridge, High Interrupting Capacity
Fuse, Current Limiter Type, Aircraft
Fuse, Instrument Type
Fuse, Instrument, Power and Telephone (Nonindicating), Style F01

$$\lambda_p = \lambda_b \pi_E \text{ Failures}/10^6 \text{ Hours}$$

APPLICATION NOTE: The reliability modeling of fuses presents a unique problem. Unlike most other components, there is very little correlation between the number of fuse replacements and actual fuse failures. Generally when a fuse opens, or "blows," something else in the circuit has created an overload condition and the fuse is simply functioning as designed. This model is based on life test data and represents fuse open and shorting failure modes due primarily to mechanical fatigue and corrosion. A short failure mode is most commonly caused by electrically conductive material shorting the fuse terminals together causing a failure to open condition when rated current is exceeded.

Base Failure Rate - λ_b

Type	λ_b
W-F-1726, W-F-1814, MIL-F-5372, MIL-F-23419, ML-F-15160	.010

Environment Factor - π_E

Environment	π_E
G_B	1.0
G_F	2.0
G_M	8.0
N_S	5.0
N_U	11
A_{IC}	9.0
A_{IF}	12
A_{UC}	15
A_{UF}	18
A_{RW}	16
S_F	.90
M_F	10
M_L	21
C_L	230

λ_p - Failure Rates for Miscellaneous Parts (Failures/10^6 Hours)

Part Type	Failure Rate
Vibrators (MIL-V-95)	
60-cycle	15
120-cycle	20
400-cycle	40
Lamps	
Neon Lamps	0.20
Fiber Optic Cables (Single Fiber Types Only)	0.1 (Per Fiber Km)
Single Fiber Optic Connectors*	0.10
Microwave Elements (Coaxial & Waveguide)	
Attenuators (Fixed & Variable)	See Resistors, Type RD
Fixed Elements (Directional Couplers, Fixed Stubs & Cavities)	Negligible
Variable Elements (Tuned Stubs & Cavities)	0.10
Microwave Ferrite Devices	
Isolators & Circulators (≤100W)	$0.10 \times \pi_E$
Isolators & Circulators (>100W)	$0.20 \times \pi_E$
Phase Shifter (Latching)	$0.10 \times \pi_E$
Dummy Loads	
< 100W	$0.010 \times \pi_E$
100W to ≤ 1000W	$0.030 \times \pi_E$
> 1000W	$0.10 \times \pi_E$
Terminations (Thin or Thick Film Loads Used in Stripline and Thin Film Circuits)	$0.030 \times \pi_E$

*Caution: Excessive Mating-Demating Cycles May Seriously Degrade Reliability

23.1 MISCELLANEOUS PARTS

Environment Factor - π_E
(Microwave Ferrite Devices)

Environment	π_E
G_B	1.0
G_F	2.0
G_M	8.0
N_S	5.0
N_U	12
A_{IC}	5.0
A_{IF}	8.0
A_{UC}	7.0
A_{UF}	11
A_{RW}	17
S_F	.50
M_F	9.0
M_L	24
C_L	450

Environment Factor - π_E
(Dummy Loads)

Environment	π_E
G_B	1.0
G_F	2.0
G_M	10
N_S	5.0
N_U	17
A_{IC}	6.0
A_{IF}	8.0
A_{UC}	14
A_{UF}	22
A_{RW}	25
S_F	.50
M_F	14
M_L	36
C_L	660

Parts Count Reliability Prediction - This prediction method is applicable during bid proposal and early design phases when insufficient information is available to use the part stress analysis models shown in the main body of this Handbook. The information needed to apply the method is (1) generic part types (including complexity for microcircuits) and quantities, (2) part quality levels, and (3) equipment environment. The equipment failure rate is obtained by looking up a generic failure rate in one of the following tables, multiplying it by a quality factor, and then summing it with failure rates obtained for other components in the equipment. The general mathematical expression for equipment failure rate with this method is:

$$\lambda_{EQUIP} = \sum_{i=1}^{i=n} N_i (\lambda_g \pi_Q)_i \qquad \text{Equation 1}$$

for a given equipment environment where:

λ_{EQUIP} = Total equipment failure rate (Failures/10^6 Hours)

λ_g = Generic failure rate for the ith generic part (Failures/10^6 Hours)

π_Q = Quality factor for the ith generic part

N_i = Quantity of ith generic part

n = Number of different generic part categories in the equipment

Equation 1 applies if the entire equipment is being used in one environment. If the equipment comprises several units operating in different environments (such as avionics systems with units in airborne inhabited (A_I) and uninhabited (A_U) environments), then Equation 1 should be applied to the portions of the equipment in each environment. These "environment-equipment" failure rates should be added to determine total equipment failure rate. Environmental symbols are defined in Section 3.

The quality factors to be used with each part type are shown with the applicable λ_g tables and are not necessarily the same values that are used in the Part Stress Analysis. Microcircuits have an additional multiplying factor, π_L, which accounts for the maturity of the manufacturing process. For devices in production two years or more, no modification is needed. For those in production less than two years, λ_g should be multiplied by the appropriate π_L factor (See page A-4).

It should be noted that no generic failure rates are shown for hybrid microcircuits. Each hybrid is a fairly unique device. Since none of these devices have been standardized, their complexity cannot be determined from their name or function. Identically or similarly named hybrids can have a wide range of complexity that thwarts categorization for purposes of this prediction method. If hybrids are anticipated for a design, their use and construction should be thoroughly investigated on an individual basis with application of the prediction model in Section 5.

The failure rates shown in this Appendix were calculated by assigning model default values to the failure rate models of Section 5 through 23. The specific default values used for the model parameters are shown with the λ_g Tables for microcircuits. Default parameters for all other part classes are summarized in the tables starting on Page A-12. For parts with characteristics which differ significantly from the assumed defaults, or parts used in large quantities, the underlying models in the main body of this Handbook can be used.

Generic Failure Rate, λ_g (Failures/10^6 Hours) for Microcircuits. See Page A-4 for π_Q Values

(Defaults: π_T Based on Ea Shown, Solder or Weld Seal DIPs/PGAs (No. Pins as Shown Below), π_L = 1 (Device in Production ≥ 2 Yr.))

Section #	Part Type	Environ. → / T_J (°C) →	G_B 50	G_F 60	G_M 65	N_S 60	N_U 65	A_{IC} 75	A_{IF} 75	A_{UC} 90	A_{UF} 90	A_{RW} 75	S_F 50	M_F 65	M_L 75	C_L 60
	Bipolar Technology															
5.1	Gate/Logic Arrays, Digital (Ea = .4)															
	1 - 100 Gates	(16 Pin DIP)	.0036	.012	.024	.024	.035	.025	.030	.032	.049	.047	.0036	.030	.069	1.2
	101 - 1000 Gates	(24 Pin DIP)	.0060	.020	.038	.037	.055	.039	.048	.051	.077	.074	.0060	.046	.11	1.9
	1001 to 3000 Gates	(40 Pin DIP)	.011	.035	.066	.065	.097	.070	.085	.091	.14	.13	.011	.082	.19	3.3
	3001 to 10,000 Gates	(128 Pin PGA)	.033	.12	.22	.22	.33	.23	.28	.30	.46	.44	.033	.28	.65	12
	10,000 to 30,000 Gates	(180 Pin PGA)	.052	.17	.33	.33	.48	.34	.42	.45	.68	.65	.052	.41	.95	17
	30,000 to 60,000 Gates	(224 Pin PGA)	.075	.23	.44	.43	.63	.46	.56	.61	.90	.85	.075	.53	1.2	21
5.1	Gate/Logic Arrays, Linear (Ea = .65)															
	1 - 100 Transistors	(14 Pin DIP)	.0095	.024	.039	.034	.049	.057	.062	.12	.13	.076	.0095	.044	.096	1.1
	101 - 300 Transistors	(16 Pin DIP)	.017	.041	.065	.054	.078	.10	.11	.22	.24	.13	.017	.072	.15	1.4
	301 - 1000 Transistors	(24 Pin DIP)	.033	.074	.11	.092	.13	.19	.19	.41	.44	.22	.033	.12	.26	2.0
	1001 - 10,000 Transistors	(40 Pin DIP)	.050	.12	.18	.15	.21	.29	.30	.63	.67	.35	.050	.19	.41	3.4
5.1	Programmable Logic Arrays (Ea = .4)															
	Up to 200 Gates	(16 Pin DIP)	.0061	.016	.029	.027	.040	.032	.037	.044	.061	.054	.0061	.034	.076	1.2
	201 to 1000 Gates	(24 Pin DIP)	.011	.028	.048	.045	.065	.054	.063	.077	.10	.089	.011	.057	.12	1.9
	1001 to 5000 Gates	(40 Pin DIP)	.022	.052	.087	.082	.12	.099	.11	.14	.19	.16	.022	.10	.22	3.3
	MOS Technology															
5.1	Gate/Logic Arrays, Digital (Ea = .35)															
	1 to 100 Gates	(16 Pin DIP)	.0057	.015	.027	.027	.039	.029	.035	.039	.056	.052	.0057	.033	.074	1.2
	101 to 1000 Gates	(24 Pin DIP)	.010	.026	.045	.043	.062	.049	.057	.066	.092	.083	.010	.053	.12	1.9
	1001 to 3000 Gates	(40 Pin DIP)	.019	.047	.080	.077	.11	.088	.10	.12	.17	.15	.019	.095	.21	3.3
	3001 to 10,000 Gates	(128 Pin PGA)	.049	.14	.25	.24	.36	.27	.32	.36	.51	.48	.049	.30	.69	12
	10,001 to 30,000 Gates	(180 Pin PGA)	.084	.22	.39	.37	.54	.42	.49	.56	.79	.72	.084	.46	1.0	17
	30,000 to 60,000 Gates	(224 Pin PGA)	.13	.31	.53	.51	.73	.59	.69	.82	1.1	.98	.13	.63	1.4	21
5.1	Gate/Logic Arrays, Linear (Ea = .65)															
	1 to 100 Transistors	(14 Pin DIP)	.0095	.024	.039	.034	.049	.057	.062	.12	.13	.076	.0095	.044	.096	1.1
	101 to 300 Transistors	(16 Pin DIP)	.017	.041	.065	.054	.078	.10	.11	.22	.24	.13	.017	.072	.15	1.4
	301 to 1,000 Transistors	(24 Pin DIP)	.033	.074	.11	.092	.13	.19	.19	.41	.44	.22	.033	.12	.26	2.0
	1001 to 10,000 Transistors	(40 Pin DIP)	.05	.12	.18	.15	.21	.29	.30	.63	.67	.35	.05	.19	.41	3.4
5.1	Floating Gate Programmable Logic Array, MOS (Ea = .35)															
	Up to 16K Cells	(24 Pin DIP)	.0046	.018	.035	.035	.052	.035	.044	.044	.070	.070	.0046	.044	.10	1.9
	16K to 64K Cells	(28 Pin DIP)	.0056	.021	.042	.042	.062	.042	.052	.053	.084	.083	.0056	.052	.12	2.3
	64K to 256K Cells	(28 Pin DIP)	.0061	.022	.043	.042	.063	.043	.054	.055	.086	.084	.0061	.053	.13	2.3
	256K to 1M Cells	(40 Pin DIP)	.0095	.033	.064	.063	.094	.065	.080	.083	.13	.13	.0095	.079	.19	3.3
5.1	Microprocessors, Bipolar (Ea = .4)															
	Up to 8 Bits	(40 Pin DIP)	.028	.061	.098	.091	.13	.12	.13	.17	.22	.18	.028	.11	.24	3.3
	Up to 16 Bits	(64 Pin PGA)	.052	.11	.18	.16	.23	.21	.24	.32	.39	.31	.052	.20	.41	5.6
	Up to 32 Bits	(128 Pin PGA)	.11	.23	.36	.33	.47	.44	.49	.65	.81	.65	.11	.42	.86	12
5.1	Microprocessors, MOS (Ea = .35)															
	Up to 8 Bits	(40 Pin DIP)	.048	.089	.13	.12	.16	.16	.17	.24	.28	.22	.048	.15	.28	3.4
	Up to 16 Bits	(64 Pin PGA)	.093	.17	.24	.22	.29	.30	.32	.45	.52	.40	.093	.27	.50	5.6
	Up to 32 Bits	(128 Pin PGA)	.19	.34	.49	.45	.60	.61	.66	.90	1.1	.82	.19	.54	1.0	12

Generic Failure Rate, λ_g (Failures/10^6 Hours) for Microcircuits. See Page A-4 for π_Q Values
(Defaults: π_T Based on Ea Shown, Solder or Weld Seal DIPs/PGAs (No. Pins as Shown Below), π_L = 1 (Device in Production ≥ 2 Yr.))

Section #	Part Type	Environ.→ / T_J (°C) →	G_B 50	G_F 60	G_M 65	N_S 60	N_U 65	A_{IC} 75	A_{IF} 75	A_{UC} 90	A_{UF} 90	A_{RW} 75	S_F 50	M_F 65	M_L 75	C_L 60
5.2	MOS Technology															
	Memories, ROM (Ea = .6)															
	Up to 16K	(24 Pin DIP)	.0047	.018	.036	.035	.053	.037	.045	.048	.074	.071	.0047	.044	.11	1.9
	16K to 64K	(28 Pin DIP)	.0059	.022	.043	.042	.063	.045	.055	.060	.090	.086	.0059	.053	.13	2.3
	64K to 256K	(28 Pin DIP)	.0067	.023	.045	.044	.066	.048	.059	.068	.099	.089	.0067	.055	.13	2.3
	256K to 1 MB	(40 Pin DIP)	.011	.036	.068	.066	.098	.075	.090	.11	.15	.14	.011	.083	.20	3.3
5.2	Memories, PROM, UVEPROM, EEPROM, EAPROM (Ea = .6) NOTE: λ_{cyc} = 0 Assumed for EEPROM															
	Up to 16K	(24 Pin DIP)	.0049	.018	.036	.036	.053	.037	.046	.049	.075	.072	.0048	.045	.11	1.9
	16K to 64K	(28 Pin DIP)	.0061	.022	.044	.043	.064	.046	.056	.062	.093	.087	.0062	.054	.13	2.3
	64K to 256K	(28 Pin DIP)	.0072	.024	.046	.045	.067	.051	.061	.073	.10	.092	.0072	.057	.13	2.3
	256K to 1 MB	(40 Pin DIP)	.012	.038	.071	.068	.10	.060	.095	.12	.16	.14	.012	.086	.20	3.3
5.2	Memories, DRAM (Ea = .6)															
	Up to 16K	(18 Pin DIP)	.0040	.014	.027	.027	.040	.029	.035	.040	.059	.055	.0040	.034	.080	1.4
	16K to 64K	(22 Pin DIP)	.0055	.019	.036	.034	.051	.039	.047	.056	.079	.070	.0055	.043	.10	1.7
	64K to 256K	(24 Pin DIP)	.0074	.023	.043	.040	.060	.049	.058	.078	.10	.084	.0074	.051	.12	1.9
	256K to 1 MB	(28 Pin DIP)	.011	.032	.057	.053	.077	.070	.080	.12	.15	.11	.011	.067	.15	2.3
5.2	Memories, SRAM, (MOS & BiMOS) (Ea = .6)															
	Up to 16K	(18 Pin DIP)	.0079	.022	.038	.034	.050	.048	.054	.083	.10	.073	.0079	.044	.098	1.4
	16K to 64K	(22 Pin DIP)	.014	.034	.057	.050	.073	.077	.085	.14	.17	.11	.014	.065	.14	1.8
	64K to 256K	(24 Pin DIP)	.023	.053	.084	.071	.10	.12	.13	.25	.27	.16	.023	.092	.19	1.9
	256K to 1 MB	(28 Pin DIP)	.043	.092	.14	.11	.16	.22	.23	.46	.49	.26	.043	.15	.30	2.3
5.2	Bipolar Technology															
	Memories, ROM, PROM (Ea = .6)															
	Up to 16K	(24 Pin DIP)	.010	.028	.050	.048	.067	.062	.070	.10	.13	.096	.010	.058	.13	1.9
	16K to 64K	(28 Pin DIP)	.017	.043	.071	.063	.091	.095	.11	.18	.21	.14	.017	.081	.18	2.3
	64K to 256K	(28 Pin DIP)	.028	.065	.10	.085	.12	.15	.16	.30	.33	.19	.028	.11	.23	2.3
	256K to 1 MB	(40 Pin DIP)	.053	.12	.18	.15	.21	.27	.29	.56	.61	.33	.053	.19	.39	3.4
5.2	Memories, SRAM (Ea = .6)															
	Up to 16K	(24 Pin DIP)	.0075	.023	.043	.041	.060	.050	.058	.077	.10	.084	.0075	.052	.12	1.9
	16K to 64K	(28 Pin DIP)	.012	.033	.058	.054	.079	.072	.083	.12	.15	.11	.012	.069	.15	2.3
	64K to 256K	(28 Pin DIP)	.018	.045	.074	.065	.095	.10	.11	.19	.22	.14	.018	.084	.18	2.3
	256K to 1 MB	(40 Pin DIP)	.033	.079	.13	.11	.16	.18	.20	.35	.39	.24	.033	.14	.30	3.4
5.3	VHSIC Microcircuits, CMOS	Refer to Section 5.3, VHSIC CMOS														
5.4	GaAs MMIC (Ea = 1.5)															
	1 to 10 Active and/or Passive Elements	(8 Pin DIP)	.019	.034	.046	.039	.052	.065	.068	.11	.12	.076	.019	.049	.086	.61
	11 to 100 Active and/or Passive Elements (Default: Driver and High Power (> 100 mW))	(16 Pin DIP)	.025	.047	.067	.058	.079	.091	.097	.15	.17	.11	.025	.073	.14	1.3
5.4	GaAs Digital (Ea = 1.4)															
	1 to 1000 Active and/or Passive Elements	(36 Pin DIP)	.0085	.030	.057	.057	.084	.060	.073	.080	.12	.11	.0085	.071	.17	3.0
	1001 to 10,000 Active and/or Passive Elements	(64 Pin PGA)	.014	.053	.10	.10	.15	.11	.13	.14	.22	.21	.014	.13	.31	5.5

Quality Factors - π_Q

Description	π_Q
Class S Categories: 1. Procured in full accordance with MIL-M-38510, Class S requirements. 2. Procured in full accordance with MIL-I-38535 and Appendix B thereto (Class U). 3. Hybrids: (Procured to Class S requirements (Quality Level K) of MIL-H-38534.	.25
Class B Categories: 1. Procured in full accordance with MIL-M-38510, Class B requirements. 2. Procured in full accordance with MIL-I-38535, (Class Q). 3. Hybrids: Procured to Class B requirements (Quality Level H) of MIL-H-38534.	1.0
Class B-1 Category: Fully compliant with all requirements of paragraph 1.2.1 of MIL-STD-883 and procured to a MIL drawing, DESC drawing or other government approved documentation. (Does not include hybrids). For hybrids use custom screening section below.	2.0

Learning Factor - π_L

Years in Production, Y	π_L
≤ .1	2.0
.5	1.8
1.0	1.5
1.5	1.2
≥ 2.0	1.0

$\pi_L = .01 \exp(5.35 - .35Y)$

Y = Years generic device type has been in production

Quality Factors (cont'd): π_Q Calculation for Custom Screening Programs

Group	MIL-STD-883 Screen/Test (Note 3)	Point Valuation
1*	TM 1010 (Temperature Cycle, Cond B Minimum) and TM 2001 (Constant Acceleration, Cond B Minimum) and TM 5004 (or 5008 for Hybrids) (Final Electricals @ Temp Extremes) and TM 1014 (Seal Test, Cond A, B, or C) and TM 2009 (External Visual)	50
2*	TM 1010 (Temperature Cycle, Cond B Minimum) or TM 2001 (Constant Acceleration, Cond B Minimum) TM 5004 (or 5008 for Hybrids) (Final Electricals @ Temp Extremes) and TM 1014 (Seal Test, Cond A, B, or C) and TM 2009 (External Visual)	37
3	Pre-Burn In Electricals TM 1015 (Burn-In B-Level/S-Level) and TM 5004 (or 5008 for Hybrids) (Post Burn-In Electricals @ Temp Extremes)	30 (B Level) 36 (S Level)
4*	TM 2020 Pind (Particle Impact Noise Detection)	11
5	TM 5004 (or 5008 for Hybrids) (Final Electricals @ Temperature Extremes)	11 (Note 1)
6	TM 2010/17 (Internal Visual)	7
7*	TM 1014 (Seal Test, Cond A, B, or C)	7 (Note 2)
8	TM 2012 (Radiography)	7
9	TM 2009 (External Visual)	7 (Note 2)
10	TM 5007/5013 (GaAs) (Wafer Acceptance)	1
11	TM 2023 (Non-Destructive Bond Pull)	1

$$\pi_Q = 2 + \frac{87}{\Sigma \text{ Point Valuations}}$$

*NOT APPROPRIATE FOR PLASTIC PARTS.

NOTES:
1. Point valuation only assigned if used independent of Groups 1, 2 or 3.
2. Point valuation only assigned if used independent of Groups 1 or 2.
3. Sequencing of tests within groups 1, 2 and 3 must be followed.
4. TM refers to the MIL-STD-883 Test Method.
5. Nonhermetic parts should be used only in controlled environments (i.e., G_B and other temperature/humidity controlled environments).

EXAMPLES:

1. Mfg. performs Group 1 test and Class B burn-in: $\pi_Q = 2 + \frac{87}{50+30} = 3.1$
2. Mfg. performs internal visual test, seal test and final electrical test: $\pi_Q = 2 + \frac{87}{7+7+11} = 5.5$

Other Commercial or Unknown Screening Levels	$\pi_Q = 10$

Generic Failure Rate - λ_g (Failures/10^6 Hours) for Discrete Semiconductors

Section #	Part Type	Env.→ G_B / T_J (°C) → 50	G_F 60	G_M 65	N_S 60	N_U 65	A_{IC} 75	A_{IF} 75	A_{UC} 90	A_{UF} 90	A_{RW} 75	S_F 50	M_F 65	M_L 75	C_L 60
	DIODES														
6.1	General Purpose Analog	.0036	.028	.049	.043	.10	.092	.21	.20	.44	.17	.0018	.076	.23	1.5
6.1	Switching	.00094	.0075	.013	.011	.027	.024	.054	.054	.12	.045	.00047	.020	.060	.40
6.1	Fast Recovery Pwr. Rectifier	.065	.52	.89	.78	1.9	1.7	3.7	3.7	8.0	3.1	.032	1.4	4.1	28
6.1	Power Rectifier/ Schottky Pwr.	.0028	.022	.039	.034	.082	.073	.16	.16	.35	.13	.0014	.060	.18	1.2
6.1	Transient Suppressor/Varistor	.0029	.023	.040	.035	.084	.075	.17	.17	.36	.14	.0015	.062	.18	1.2
6.1	Voltage Ref/Reg. (Avalanche and Zener)	.0033	.024	.039	.035	.082	.066	.15	.13	.27	.12	.0016	.060	.16	1.3
6.1	Current Regulator	.0056	.040	.066	.060	.14	.11	.25	.22	.46	.21	.0028	.10	.28	2.1
6.2	Si Impatt (f ≤ 35 GHz)	.86	2.8	8.9	5.6	20	11	14	36	62	44	.43	16	67	350
6.2	Gunn/Bulk Effect	.31	.76	2.1	1.5	4.6	2.0	2.5	4.5	7.6	7.9	.16	3.7	12	94
6.2	Tunnel and Back	.004	.0096	.0026	.0019	.058	.025	.032	.057	.097	.10	.002	.048	.15	1.2
6.2	PIN	.028	.068	.19	.14	.41	.18	.22	.40	.69	.71	.014	.34	1.1	8.5
6.2	Schottky Barrier and Point Contact (200 MHz ≤ f ≤ 35 GHz)	.047	.11	.31	.23	.68	.30	.37	.67	1.1	1.2	.023	.56	1.8	14
6.2	Varactor	.0043	.010	.029	.021	.063	.028	.034	.062	.11	.11	.0022	.052	.17	1.3
6.10	Thyristor/SCR	.0025	.020	.034	.030	.072	.064	.14	.14	.31	.12	.0012	.053	.16	1.1
	TRANSISTORS														
6.3	NPN/PNP (f < 200 MHz)	.00015	.0011	.0017	.0017	.0037	.0030	.0067	.0060	.013	.0056	.000073	.0027	.0074	.056
6.3	Power NPN/PNP (f < 200 MHz)	.0057	.042	.069	.063	.15	.12	.26	.23	.50	.22	.0029	.11	.29	2.2
6.4	Si FET (f ≤ 400 MHz)	.014	.099	.16	.15	.34	.28	.62	.53	1.1	.51	.0069	.25	.68	5.3
6.9	Si FET (f > 400 MHz)	.099	.24	.64	.47	1.4	.61	.76	1.3	2.3	2.4	.049	1.2	3.6	30
6.8	GaAs FET (P < 100 mW)	.17	.51	1.5	1.0	3.4	1.8	2.3	5.4	9.2	7.2	.083	2.8	11	63
6.8	GaAs FET (P ≥ 100 mW)	.42	1.3	3.9	2.5	8.5	4.5	5.6	13	23	18	.21	6.9	27	160
6.5	Unijunction	.016	.12	.20	.18	.42	.36	.80	.74	1.6	.66	.0079	.31	.88	6.4
6.6	RF, Low Noise (f > 200 MHz, P < 1W)	.094	.23	.63	.46	1.4	.60	.75	1.3	2.3	2.4	.047	1.1	3.6	28
6.7	RF, Power (P ≥ 1W)	.074	.15	.37	.29	.81	.29	.37	.52	.88	.037	.33	.66	1.8	18

Generic Failure Rate - λ_g (Failures/10^6 Hours) for Discrete Semiconductors (cont'd)

Section #	Part Type	Env.→ G_B	G_F	G_M	N_S	N_U	A_{IC}	A_{IF}	A_{UC}	A_{UF}	A_{RW}	S_F	M_F	M_L	C_L
		T_J (°C)→ 50	60	65	60	65	75	75	90	90	75	50	65	75	60
	OPTO-ELECTRONICS														
6.11	Photodetector	.011	.029	.083	.059	.18	.084	.11	.21	.35	.34	.0057	.15	.51	3.7
6.11	Opto-Isolator	.027	.070	.20	.14	.43	.20	.25	.49	.83	.80	.013	.35	1.2	8.7
6.11	Emitter	.00047	.0012	.0035	.0025	.0077	.0035	.0044	.0086	.015	.014	.00024	.0063	.021	.15
6.12	Alphanumeric Display	.0062	.016	.045	.032	.10	.046	.058	.11	.19	.18	.0031	.082	.28	2.0
6.13	Laser Diode, GaAs/Al GaAs	5.1	16	49	32	110	58	72	100	170	230	2.6	87	350	2000
6.13	Laser Diode, In GaAs/In GaAsP	8.9	28	85	55	190	100	130	180	300	400	4.5	150	600	3500
7	TUBES	See Section 7 (Includes Receivers, CRTs, Cross Field Amplifiers, Klystrons, TWTs, Magnetrons)													
8	LASERS	See Section 8													

Discrete Semiconductor Quality Factors - π_Q

Section Number	Part Types	JANTXV	JANTX	JAN	Lower	Plastic
6.1, 6.3, 6.4, 6.5, 6.10, 6.11, 6.12	Non-RF Devices/ Opto-Electronics*	.70	1.0	2.4	5.5	8.0
6.2	High Freq Diodes	.50	1.0	5.0	25	50
6.2	Schottky Diodes	.50	1.0	1.8	2.5	----
6.6, 6.7, 6.8, 6.9	RF Transistors	.50	1.0	2.0	5.0	----
6.13	*Laser Diodes	π_Q = 1.0 Hermetic Package = 1.0 Nonhermetic with Facet Coating = 3.3 Nonhermetic without Facet Coating				

Generic Failure Rate, λ_g (Failure/10^6 Hours) For Resistors

Section #	Part Type	Style	MIL-R-	Env. → G_B / T_A(°C) → 30	G_F 40	G_M 45	N_S 40	N_U 45	A_{IC} 55	A_{IF} 55	A_{UC} 70	A_{UF} 70	A_{RW} 55	S_F 30	M_F 45	M_L 55	C_L 40
9.1	Composition	RCR	39008	.00050	.0022	.0071	.0037	.012	.0052	.0065	.016	.025	.025	.00025	.0098	.035	.36
9.1	Composition	RC	11	.00050	.0022	.0071	.0037	.012	.0052	.0065	.016	.025	.025	.00025	.0098	.035	.36
9.2	Film, Insulated	RLR	39017	.0012	.0027	.011	.0054	.020	.0063	.013	.018	.033	.030	.00025	.014	.044	.69
9.2	Film, Insulated	RL	22684	.0012	.0027	.011	.0054	.020	.0063	.013	.018	.033	.030	.00025	.014	.044	.69
9.2	Film, RN (R, C or N)	RNR	55182	.0014	.0031	.013	.0061	.023	.0072	.014	.021	.038	.034	.00028	.016	.050	.78
9.2	Film	RN	10509	.0014	.0031	.013	.0061	.023	.0072	.014	.021	.038	.034	.00028	.016	.050	.78
9.3	Film, Power	RD	11804	.012	.025	.13	.062	.21	.078	.10	.19	.24	.32	.0060	.18	.47	8.2
9.4	Film, Network	RZ	83401	.0023	.0066	.031	.013	.055	.022	.043	.077	.15	.10	.0011	.055	.15	1.7
9.5	Wirewound, Accurate	RBR	39005	.0085	.018	.10	.045	.16	.15	.17	.30	.38	.26	.0068	.13	.37	5.4
9.5	Wirewound, Accurate	RB	93	.0085	.018	.10	.045	.16	.15	.17	.30	.38	.26	.0068	.13	.37	5.4
9.6	Wirewound, Power	RWR	39007	.014	.031	.16	.077	.26	.073	.15	.19	.39	.42	.0042	.21	.62	9.4
9.6	Wirewound, Power	RW	26	.013	.028	.15	.070	.24	.066	.13	.18	.35	.38	.0038	.19	.56	8.6
9.7	Wirewound, Power, Chassis Mounted	RER	39009	.0080	.018	.096	.045	.15	.044	.088	.12	.24	.25	.0040	.13	.37	5.5
9.7	Wirewound, Power, Chassis Mounted	RE	18546	.0080	.018	.096	.045	.15	.044	.088	.12	.24	.25	.0040	.13	.37	5.5
9.8	Thermistor	RTH	23648	.065	.32	1.4	.71	1.6	.71	1.9	1.0	2.7	2.4	.032	1.3	3.4	62
9.9	Wirewound, Variable	RTR	39015	.025	.055	.35	.16	.58	.16	.26	.35	.59	1.1	.013	.52	1.6	24
9.9	Wirewound, Variable	RT	27208	.025	.055	.35	.16	.58	.16	.26	.35	.59	1.1	.013	.52	1.6	24
9.10	Wirewound, Variable, Precision	RR	12934	.33	.73	7.0	2.9	12	3.5	5.3	7.1	9.8	23	.16	11	33	510
9.11	Wirewound, Variable, Semiprecision	RA	19	.15	.35	3.1	1.2	5.4	1.9	2.8	*	*	9.0	.075	*	*	*
9.11	Wirewound, Variable, Semiprecision	RK	39002	.15	.35	3.1	1.2	5.4	1.9	2.8	*	*	9.0	.075	*	*	*
9.12	Wirewound, Variable, Power	RP	22	.15	.34	2.9	1.2	5.0	1.6	2.4	*	*	7.6	.076	*	*	*
9.13	Nonwirewound, Variable	RJR	39035	.033	.10	.50	.21	.87	.19	.27	.52	.79	1.5	.017	.79	2.2	35
9.13	Nonwirewound, Variable	RJ	22097	.033	.10	.50	.21	.87	.19	.27	.52	.79	1.5	.017	.79	2.2	35
9.14	Composition, Variable	RV	94	.050	.11	1.1	.45	1.7	2.8	4.6	4.6	7.5	3.3	.025	1.5	4.7	67
9.15	Nonwirewound, Variable Precision	RQ	39023	.043	.15	.75	.35	1.3	.39	.78	1.8	2.8	2.5	.021	1.2	3.7	49
9.15	Film, Variable	RVC	23285	.048	.16	.76	.36	1.3	.36	.72	1.4	2.2	2.3	.024	1.2	3.4	52

NOTE: 1) * Not Normally used in this Environment
2) T_A = Default Component Ambient Temperature (°C)

Quality	Established Reliability Styles S	R	P	M	MIL-SPEC	Lower
π_Q	.030	.10	.30	1.0	3.0	10

Generic Failure Rate, λ_g (Failures/10^6 Hours) for Capacitors

Section #	Part Type or Dielectric	Style	MIL-C-	Env.→ G_B / T_A (°C)→ 30	G_F 40	G_M 45	N_S 40	N_U 45	A_{IC} 55	A_{IF} 55	A_{UC} 70	A_{UF} 70	A_{RW} 55	S_F 30	M_F 45	M_L 55	C_L 40
10.1	Paper, By-Pass	CP	25	.0036	.0072	.033	.018	.055	.023	.03	.070	.13	.083	.0018	.044	.12	2.1
10.1	Paper, By-Pass	CA	12889	.0039	.0087	.042	.022	.070	.035	.047	.19	.35	.13	.002	.056	.19	2.5
10.2	Paper/Plastic, Feed-through	CZR	11693	.0047	.0096	.044	.034	.073	.030	.040	.094	.15	.11	.0024	.058	.18	2.7
10.3	Paper/Plastic Film	CPV	14157	.0021	.0042	.017	.010	.030	.0088	.013	.026	.048	.044	.0010	.023	.063	1.1
10.3	Paper/Plastic Film	CQR	19978	.0021	.0042	.017	.010	.030	.0088	.013	.026	.048	.044	.0010	.023	.063	1.1
10.4	Metallized Paper/Plastic	CHR	39022	.0029	.0058	.023	.014	.041	.012	.018	.037	.066	.060	.0014	.032	.088	1.5
10.4	Metallized Plastic/ Plastic	CH	18312	.0029	.0058	.023	.014	.041	.012	.018	.037	.066	.060	.0014	.032	.088	1.5
10.5	Metallized Paper/Plastic	CFR	55514	.0041	.0083	.042	.021	.067	.026	.048	.086	.14	.10	.0020	.054	.15	2.5
10.6	Metallized Plastic	CRH	83421	.0023	.0092	.019	.012	.033	.0096	.014	.034	.053	.048	.0011	.026	.07	1.2
10.7	MICA (Dipped or Molded)	CMR	39001	.0005	.0015	.0091	.0044	.014	.0068	.0095	.054	.069	.031	.00025	.012	.046	.45
10.7	MICA (Dipped)	CM	5	.0005	.0015	.0091	.0044	.014	.0068	.0095	.054	.069	.031	.00025	.012	.046	.45
10.8	MICA (Button)	CB	10950	.018	.037	.19	.094	.31	.10	.14	.47	.60	.46	.0091	.25	.68	11
10.9	Glass	CYR	23269	.00032	.00096	.0059	.0029	.0094	.0044	.0062	.035	.045	.020	.00016	.0076	.030	.29
10.9	Glass	CY	11272	.00032	.00096	.0059	.0029	.0094	.0044	.0062	.035	.045	.020	.00016	.0076	.030	.29
10.10	Ceramic (Gen. Purpose)	CK	11015	.0036	.0074	.034	.019	.056	.015	.015	.032	.048	.077	.0014	.049	.13	2.3
10.10	Ceramic (Gen. Purpose)	CKR	39014	.0036	.0074	.034	.019	.056	.015	.015	.032	.048	.077	.0014	.049	.13	2.3
10.11	Ceramic (Temp. Comp.)	CCR	20	.00078	.0022	.013	.0056	.023	.0077	.015	.053	.12	.046	.00039	.017	.065	.68
10.11	Ceramic Chip	CDR	55681	.00078	.0022	.013	.0056	.023	.0077	.015	.053	.12	.046	.00039	.017	.065	.68
10.12	Tantalum, Solid	CSR	39003	.0018	.0039	.016	.0097	.028	.0091	.011	.034	.057	.055	.00072	.022	.066	1.0
10.13	Tantalum, Non-Solid	CLR	39006	.0061	.013	.069	.039	.11	.031	.061	.13	.29	.18	.0030	.089	.26	4.0
10.13	Tantalum, Non-Solid	CL	3965	.0061	.013	.069	.039	.11	.031	.061	.13	.29	.18	.0030	.089	.26	4.0
10.14	Aluminum Oxide	CUR	39018	.024	.061	.42	.18	.59	.46	.55	2.1	2.6	1.2	.012	.49	1.7	21
10.15	Aluminum Dry	CE	62	.029	.081	.58	.24	.83	.73	.88	4.3	5.4	2.0	.015	.68	2.8	28
10.16	Variable, Ceramic	CV	81	.08	.27	1.2	.71	2.3	.69	1.1	6.2	12	4.1	.032	1.9	5.9	85
10.17	Variable, Piston	PC	14409	.033	.13	.62	.31	.93	.21	.28	2.2	3.3	2.2	.016	.93	3.2	37
10.18	Variable, Air Trimmer	CT	92	.080	.33	1.6	.87	3.0	1.0	1.7	9.9	19	6.1	.032	2.5	8.9	100
10.19	Variable, Vacuum	CG	23183	0.4	1.3	6.7	3.6	13	5.7	10	58	90	23	.20	*	*	**

NOTE: 1) * Not Normally used in this Environment
2) T_A = Default Component Ambient Temperature (°C)

Quality	Established Reliability Styles S	R	P	M	L	MIL-SPEC	Lower
π_Q	.030	.10	.30	1.0	3.0	3.0	10

Generic Failure Rate, λ_g (Failures/10^6 Hours) for Inductive and Electromechanical Parts

Section #	Part Type	MIL-	Env.→ G_B	G_F	G_M	N_S	N_U	A_{IC}	A_{IF}	A_{UC}	A_{UF}	A_{RW}	S_F	M_F	M_L	C_L
			T_A (°C)→30	40	45	40	45	55	55	70	70	55	30	45	55	40
	INDUCTIVE DEVICES															
11.1	Low Power Pulse XFMR	T-21038	.0035	.023	.049	.019	.065	.027	.037	.041	.052	.11	.0018	.053	.16	2.3
11.1	Audio XFMR	T-27	.0071	.046	.097	.038	.13	.055	.073	.081	.10	.22	.0035	.11	.31	4.7
11.1	High Pwr. Pulse and Pwr. XFMR, Filter	T-27	.023	.16	.34	.13	.45	.21	.27	.35	.45	.82	.011	.37	1.2	16
11.1	RF XFMR	T-55631	.028	.18	.39	.15	.52	.22	.29	.33	.42	.88	.014	.42	1.2	19
11.2	RF Coils, Fixed or Molded	C-15305 C-39010	.0017	.0073	.023	.0091	.031	.011	.015	.016	.022	.052	.00083	.25	.073	1.1
11.2	RF Coils, Variable	C-15305	.0033	.015	.046	.018	.061	.022	.03	.033	.044	.10	.0017	.05	.15	2.2
	ROTATING DEVICES															
12.1	Motors		1.6	2.4	3.3	2.4	3.3	7.1	7.1	31	31	7.1	1.6	*	*	*
12.2	Synchros		.07	.20	1.5	.70	2.2	.78	1.2	7.9	12	5.1	.035	1.7	7.1	68
12.2	Resolvers		.11	.30	2.2	1.0	3.3	1.2	1.8	12	18	7.6	.053	2.6	11	100
	ELAPSED TIME METERS															
12.3	ETM-AC		10	20	120	70	180	50	80	160	250	260	5.0	140	380	*
12.3	ETM-Inverter Driver		15	30	180	105	270	75	120	240	375	390	7.5	210	570	*
13.3	ETM-Commutator DC		40	80	480	280	720	200	320	640	1000	1040	20	560	1520	*
	RELAYS															
13.1	General Purpose		.13	.28	2.1	1.1	3.8	1.1	1.4	1.9	2.1	7.0	.066	3.5	10	*
13.1	Contactor, High Current		.43	.89	6.9	3.6	12	3.4	4.4	6.2	6.7	22	.21	11	32	*
13.1	Latching		.13	.28	2.1	1.1	3.8	1.1	1.4	1.9	2.1	7.0	.066	3.5	10	*
13.1	Reed		.11	.23	1.8	.92	3.3	.96	1.2	2.1	2.3	6.3	.054	3.0	9.0	*
13.1	Thermal, Bi-metal		.29	.60	4.6	2.4	8.2	2.3	2.9	4.1	4.5	15	.14	7.6	22	*
13.1	Meter Movement		.88	1.8	14	7.4	26	7.1	9.1	13	14	46	.44	24	67	*
13.2	Solid State		.40	1.2	4.8	2.4	6.8	4.8	7.6	8.4	13	9.2	.16	4.8	13	240
13.2	Hybrid and Solid State Time Delay		.50	1.5	6.0	3.0	8.5	6.0	9.5	11	16	12	.20	6.0	17	300
	SWITCHES															
14.1	Toggle or Pushbutton		.0010	.0030	.018	.0080	.020	.010	.018	.013	.022	.046	.0005	.025	.067	1.2
14.2	Sensitive	S-8805	.15	.44	2.7	1.2	4.3	1.5	2.7	1.9	3.3	6.8	.074	3.7	9.9	180
14.3	Rotary Wafer	S-3786	.33	.99	5.9	2.6	9.5	3.3	5.9	4.3	7.2	15	.16	8.2	22	390
14.4	Thumbwheel	S-22710	.56	1.7	10	4.5	16	5.6	10	7.3	12	28	.28	14	38	670
14.5	Circuit Breaker, Thermal	C-83383	.11	.23	1.7	.91	3.1	.80	1.0	1.3	1.4	5.2	.057	2.8	7.5	N/A
14.5	Circuit Breaker, Magnetic	C-55629	.060	.12	.90	.48	1.6	.42	.54	.66	.72	2.8	.030	1.5	4.0	N/A
	CONNECTORS															
15.1	Circular/Rack/Panel		0.011	0.14	.11	.069	.20	.059	.098	.23	.34	.37	.0054	.16	.42	6.8
15.1	Coaxial		.012	.015	.13	.075	.21	.060	.10	.22	.32	.38	.0061	.16	.54	7.3
15.2	Printed Circuit Board Connector		.0054	.021	.055	.035	.10	.059	.11	.085	.16	.19	.0027	.078	.21	3.4
15.3	IC Sockets		.0019	.0058	.027	.012	.035	.015	.023	.021	.025	.048	.00097	.027	.070	1.3
16.1	Interconnection Assemblies (PCBs)		.053	.11	.37	.69	.27	.27	.43	.85	1.5	1.0	.027	.53	1.4	27

NOTE: 1) * Not normally used in this environment
2) T_A = Default Component Ambient Temperature (°C)

Generic Failure Rate, λ_g (Failures/10^6 Hours) for Miscellaneous Parts

Section #	Part Type Dielectric	MIL-	Env.→ G_B	G_F	G_M	N_S	N_U	A_{IC}	A_{IF}	A_{UC}	A_{UF}	A_{RW}	S_F	M_F	M_L	C_L
			T_A (°C)→ 30	40	45	40	45	55	55	70	70	55	30	45	55	40
	SINGLE CONNECTIONS															
17.1	Hand Solder, w/o Wrapping		.0026	.0052	.018	.010	.029	.010	.016	.016	.021	.042	.0013	.023	.062	1.1
17.1	Hand Solder, w/Wrapping		.00014	.00028	.00098	.00056	.0015	.00056	.00084	.00084	.0011	.0022	.00007	.0013	.0034	.059
17.1	Crimp		.00026	.00052	.0018	.0010	.0029	.0010	.0016	.0016	.0021	.0042	.00013	.0023	.0062	.11
17.1	Weld		.000050	.000100	.000350	.000200	.000550	.000200	.000300	.000300	.000400	.000800	.000025	.000450	.001200	.021000
17.1	Solderless Wrap		.0000035	.000007	.000025	.000014	.000039	.000014	.000021	.000021	.000028	.000056	.0000018	.000031	.000084	.0015
17.1	Clip Termination		.00012	.00024	.00084	.00048	.0013	.00048	.00072	.00072	.00096	.0019	.00006	.0011	.0029	.050
17.1	Reflow Solder		.000069	.000138	.000483	.000276	.000759	.000276	.000414	.000414	.000552	.001104	.000035	.000621	.001656	.02898
	METERS, PANEL															
18.1	DC Ammeter or Voltmeter	M-10304	0.09	0.36	2.3	1.1	3.2	2.5	3.8	5.2	6.6	5.4	0.099	5.4	N/A	N/A
18.1	AC Ammeter or Voltmeter	M-10304	0.15	0.61	3.8	1.8	5.4	4.3	6.4	8.9	11	9.2	0.17	9.2	N/A	N/A
19.1	Quartz Crystals	C-3098	.032	.096	.32	.19	.51	.38	.54	.70	.90	.74	.016	.42	1.0	16
20.1	Lamps, Incandescent, AC		3.9	7.8	12	12	16	16	16	19	23	19	2.7	16	23	100
20.1	Lamps, Incandescent, DC		13	26	38	38	51	51	51	64	77	64	9.0	51	77	350
	ELECTRONIC FILTERS															
21.1	Ceramic-Ferrite	F-15733	.022	.044	.13	.088	.20	.15	.20	.24	.29	.24	.018	.15	.33	2.6
21.1	Discrete LC Comp.	F-15733	.12	.24	.72	.48	1.1	.84	1.1	1.3	1.6	1.3	.096	.84	1.8	14
21.1	Discrete LC & Crystal Comp.	F-18327	.27	.54	1.6	1.1	2.4	1.9	2.4	3.0	3.5	3.0	.22	1.9	4.1	32
22.1	FUSES		.010	.020	.060	.050	.11	.090	.12	.15	.18	.16	.009	.10	.21	2.3

π_Q Factor for Use with Section 11-22 Devices

Section #	Part Type	Established Reliability	MIL-SPEC	Non-MIL
11.1, 11.2	Inductive Devices	.25*	1.0	10
12.1, 12.2, 12.3	Rotating Devices	N/A	N/A	N/A
13.1	Relays, Mechanical	.60	3.0	9.0
13.2	Relays, Solid State and Time Delay (Hybrid & Solid State)	N/A	1.0	4
14.1, 14.2	Switches, Toggle, Pushbutton, Sensitive	N/A	1.0	20
14.3	Switches, Rotary Wafer	N/A	1.0	50
14.4	Switches, Thumbwheel	N/A	1.0	10
14.5	Circuit Breakers, Thermal	N/A	1.0	8.4
15.1, 15.2, 15.3	Connectors	N/A	1.0	2.0
16.1	Interconnection Assemblies	N/A	1.0	2.0
17.1	Connections	N/A	N/A	N/A
18.1	Meters, Panel	N/A	1.0	3.4
19.1	Quartz Crystals	N/A	1.0	2.1
20.1	Lamps, Incandescent	N/A	N/A	N/A
21.1	Electronic Filters	N/A	1.0	2.9
22.1	Fuses	N/A	N/A	N/A

* Category applies only to MIL-C-39010 Coils.

Default Parameters for Discrete Semiconductors

Section #	Part Type	λ_b	π_T	π_M	π_S	π_C	π_A	π_R	Comments
5.0	MICROCIRCUITS	All Defaults provided with λ_p Table							
	DIODES								
6.1	General Purpose Analog	.0038			.42	1.0			Voltage Stress = .7, Metallurgically Bonded Contacts
6.1	Switching	.001			.42	1.0			Voltage Stress = .7, Metallurgically Bonded Contacts
6.1	Fast Recovery Power Rectifier	.069			.42	1.0			Voltage Stress = .7, Metallurgically Bonded Contacts
6.1	Transient Suppressor/Varistor	.0031			1.0	1.0			Metallurgically Bonded Contacts
6.1	Power Rectifier	.003			.42	1.0			Voltage Stress = .7, Metallurgically Bonded Contacts
6.1	Voltage Ref/Reg. (Avalanche & Zener)	.002			1.0	1.0			Metallurgically Bonded Contacts
6.1	Current Regulator	.0034			1.0	1.0			Metallurgically Bonded Contacts
6.2	Si Impatt (≤ 35 GHz)	.22					1.0	1.0	
6.2	Gunn/Bulk Effect	.18					1.0	1.0	
6.2	Tunnel and Back	.0023					1.0	1.0	
6.2	PIN	.0081					1.0	2.0	Rated Power = 1000W
6.2	Schottky Barrier and Point Contact (200 MHz ≤ frequency ≤ 35 GHz)	.027			1.0	1.0			
6.2	Varactor	.0025			2.5	1.0			Multiplier Application
6.10	Thyristor/SCR	.0022			.51			1.0	Voltage Stress = .7, Rated Forward Current = 1 Amp
	TRANSISTORS								
6.3	NPN/PNP (f < 200 MHz)	.00074			.21		.70	.77	Voltage Stress = .5, Switching Application, Rated Power = .5W
6.3	Power NPN/PNP (f < 200 MHz)	.00074			.54		1.5	5.5	Voltage Stress = .8, Linear Application, Rated Power = 100W
6.4	Si FET (f ≤ 400 MHz)	.012					.70		MOSFET, Small Signal Switching
6.9	Si FET (f > 400 MHz)	.060							MOSFET
6.8	GaAs FET (P < 100 mW)	.052		1.0			1.0		Low Noise Application, 1 ≤ f ≤ 10 GHz, Input and Output Matching
6.8	GaAs FET (P ≥ 100 mW)	.13		1.0			1.0		CW Application, 5 GHz, 1W Average Output Power, Input and Output Matching
6.5	Unijunction	.0083							
6.6	RF, Low Noise, Bipolar (f > 200 MHz, P < 1W)	.18			.39			.77	Voltage Stress = .7, Rated Power = .5W
6.7	RF, Power (P ≥ 1W)	.08	.36	1.0			1.6		1 GHz, 100W, T_J = 130°C for all Environments, Voltage Stress = .45, Gold Metallization Pulsed Application, 20% Duty Factor, Pulse Width = 5ms, Input and Output Matching

Default Parameters for Discrete Semiconductors

Section #	Part Type	λ_b	π_T	π_M	π_S	π_C	π_A	π_R	Comments
	OPTO-ELECTRONICS								
6.11	Photodetector	.0055							Phototransistor
6.11	Opto-Isolator	.013							Phototransistor, Single Device
6.11	Emitter	.00023							LED
6.12	Alphanumeric Display	.0030							7 Character Segment Display
6.13	Laser Diode, GaAs/Al GaAs	3.23			1.0 (π_P)		.77		GaAs/Al GaAs, Hermetic, for Environments with T_J > 75°C, assume T_J = 75°C, Forward Peak Current = .5 Amps (π_I = .62) Duty Cycle = .6, Pr/Ps = .5 (π_P = 1)
6.13	Laser Diode, In/GaAs/In GaAsP	5.65			1.0 (π_P)		.77		GaAs/Al GaAs, Hermetic, for Environments with T_J > 75°C, assume T_J = 75°C, Forward Peak Current = .5 Amps (π_I = .62) Duty Cycle = .6, Pr/Ps = .5 (π_P = 1)

Default Parameters for Resistors

Section #	Part Type	Style	MIL-R-SPEC	π_R	π_V	π_{TAPS}	Comments
9.1	Composition	RCR	39008	1.1			Pwr. Stress = .5, 1M ohm
9.1	Composition	RC	11	1.1			Pwr. Stress = .5, 1M ohm
9.2	Film, Insulated	RLR	39017	1.1			Pwr. Stress = .5, 1M ohm
9.2	Film, Insulated	RL	22684	1.1			Pwr. Stress = .5, 1M ohm
9.2	Film, RN (R, C or N)	RNR	55182	1.1			Pwr. Stress = .5, 1M ohm
9.2	Film	RN	10509	1.1			Pwr. Stress = .5, 1M ohm
9.3	Film, Power	RD	11804	1.0			Pwr. Stress = .5, 100 ohm
9.4	Fixed, Network	RZ	83401				Pwr. Stress = .5, $T_C = T_A + 28°C$, 10 Film Resistors
9.5	Wirewound, Accurate	RBR	39005	1.7			Pwr. Stress = .5,100K ohms
9.5	Wirewound, Accurate	RB	93	1.7			Pwr. Stress = .5, 100K ohms
9.6	Wirewound, Power	RWR	39007	1.1			Pwr. Stress = .5, 5K ohms, RWR 84
9.6	Wirewound, Power	RW	26	1.0			Pwr. Stress = .5, 5K ohms, RW10
9.7	Wirewound, Power, Chassis Mounted	RER	39009	1.1			Pwr. Stress = .5, Noninductively Wound, 5K ohm, RER 55
9.7	Wirewound, Power, Chassis Mounted	RE	18546	1.1			Pwr. Stress = .5, MIL-R-18546, Char. N, 5K ohm, RE75
9.8	Thermistor	RTH	23648				Disk Type
9.9	Wirewound, Variable	RTR	39015	1.4	1.1	1.0	Pwr. Stress = .5, 5K ohms, 3 Taps, Voltage Stress = .5
9.9	Wirewound, Variable	RT	27208	1.4	1.1	1.0	Pwr. Stress = .5, 3 Taps, Voltage Stress = .5
9.10	Wirewound, Variable, Precision	RR	12934	1.4	1.1	1.0	Pwr. Stress = .5, Construction Class 5 (π_C = 1.5), 50K ohm, 3 Taps, Voltage Stress = .5
9.11	Wirewound, Variable, Semiprecision	RA	19	1.4	1.0	1.0	Pwr. Stress = .5, 5K ohms, 3 Taps, Voltage Stress = .5
9.11	Wirewound, Semiprecision	RK	39002	1.4	1.0	1.0	Pwr. Stress = .5, 3 Taps, Voltage Stress = .5
9.12	Wirewound, Variable, Power	RP	22	1.4	1.0	1.0	Pwr. Stress = .5, 3 Taps, Voltage Stress = .5, Unenclosed (π_C = 1)
9.13	Nonwirewound, Variable	RJR	39035	1.2	1.0	1.0	Pwr. Stress = .5, 200K ohm, 3 Taps, Voltage Stress = .5
9.13	Nonwirewound, Variable	RJ	22097	1.2	1.0	1.0	Pwr. Stress = .5, 200K ohm, 3 Taps, Voltage Stress = .5
9.14	Composition, Variable	RV	94	1.2	1.0	1.0	Pwr. Stress = .5, 200K ohm, 3 Taps, Voltage Stress = .5
9.15	Nonwirewound, Variable Precision	RQ	39023	1.2	1.0	1.0	Pwr. Stress = .5, 200K ohm, 3 Taps, Voltage Stress = .5
9.15	Film, Variable	RVC	23285	1.2	1.0	1.0	Pwr. Stress = .5, 200K ohm, 3 Taps, Voltage Stress = .5

Default Parameters for Capacitors

Section #	Part Type or Dielectric	Style	MIL-C-SPEC	π_{CV}	Temp. Rating	Comments
10.1	Paper, By-Pass	CP	25	1.0	125	Voltage Stress = .5, .15 µF
10.1	Paper, By-Pass	CA	12889	1.0	85	Voltage Stress = .5, .15 µF
10.2	Paper/Plastic, Feed-through	CZR	11693	1.0	125	Voltage Stress = .5, .061 µF
10.3	Paper/Plastic Film	CPV	14157	1.0	125	Voltage Stress = .5, .027 µF
10.3	Paper/Plastic Film	CQR	19978	1.0	125	Voltage Stress = .5, .033 µF
10.4	Metallized Paper/Plastic	CHR	39022	1.0	125	Voltage Stress = .5, .14 µF
10.4	Metallized Plastic/Plastic	CH	18312	1.0	125	Voltage Stress = .5, .14 µF
10.5	Metallized Paper/Plastic	CFR	55514	1.0	125	Voltage Stress = .5, .33 µF
10.6	Metallized Plastic	CRH	83421	1.0	125	Voltage Stress = .5, .14 µF
10.7	MICA (Dipped or Molded)	CMR	39001	1.0	125	Voltage Stress = .5, 300 pF
10.7	MICA (Dipped)	CM	5	1.0	125	Voltage Stress = .5, 300 pF
10.8	MICA (Button)	CB	10950	1.0	150	Voltage Stress = .5, 160 pF
10.9	Glass	CYR	23269	1.0	125	Voltage Stress = .5, 30 pF
10.9	Glass	CY	11272	1.0	125	Voltage Stress = .5, 30 pF
10.10	Ceramic (Gen. Purpose)	CK	11015	1.0	125	Voltage Stress = .5, 3300 pF
10.10	Ceramic (Gen. Purpose)	CKR	39014	1.0	125	Voltage Stress = .5, 3300 pF
10.11	Ceramic (Temp. Comp.)	CCR	20	1.0	125	Voltage Stress = .5, 81 pF
10.11	Ceramic Chip	CDR	55681	1.0	125	Voltage Stress = .5, 81 pF
10.12	Tantalum, Solid	CSR	39003	1.0	125	Voltage Stress = .5, 1.0 µF, .6 ohms/volt, series resistance, π_{SR} = .13
10.13	Tantalum, Non-Solid	CLR	39006	1.0	125	Voltage Stress = .5, Foil, Hermetic, 20 µF, π_c = 1
10.13	Tantalum, Non-Solid	CL	3965	1.0	125	Voltage Stress = .5, Foil, Hermetic, 20 µF, π_c = 1
10.14	Aluminum Oxide	CUR	39018	1.3	125	Voltage Stress = .5, 1700 µF
10.15	Aluminum Dry	CE	62	1.3	85	Voltage Stress = .5, 1600 µF
10.16	Variable, Ceramic	CV	81		85	Voltage Stress = .5
10.17	Variable, Piston	PC	14409		125	Voltage Stress = .5
10.18	Variable, Air Trimmer	CT	92		85	Voltage Stress = .5
10.19	Variable, Vacuum	CG	23183		85	Voltage Stress = .5, Variable Configuration

Default Parameters for Inductive and Electromechanical Parts

Section #	Part Type	MIL-SPEC	π_C	π_{CYC}	π_F	Comments
	INDUCTIVE					
11.1	Low Pwr. Pulsed, XFMR	MIL-T-21038				Max. Rated Temp. = 130°C, ΔT = 10
11.1	Audio XFMR	MIL-T-27				Max. Rated Temp. = 130°C, ΔT = 10
11.1	High Pwr. Pulse and Pwr. XFMR, Filter	MIL-T-27				Max. Rated Temp. = 130°C, ΔT = 30
11.1	RF Transformers	MIL-T-55631				Max. Rated Temp. = 130°C, ΔT = 10
11.2	RF Coils, Fixed or Molded	MIL-C-15305	1			Max. Rated Temp. = 125°C, ΔT = 10
11.2	RF Coils, Variable	MIL-C-15305	2			Max. Rated Temp., = 125°C, ΔT = 10
	ROTATING DEVICES					
12.1	Motors					t = 15,000 hours (Assumed Replacement Time)
12.2	Synchros					$T_F = T_A$ + 40, Size 10 - 16, 3 Brushes
12.2	Resolvers					$T_F = T_A$ + 40, Size 10 - 16, 3 Brushes
	Elapsed Time Meters (ETM)					
12.3	ETM-AC					Op. Temp/Rated Temp. = .5 (π_T = .5)
12.3	ETM-Inverter Driver					Op. Temp/Rated Temp. = .5 (π_T = .5)
12.3	ETM-Commutater DC					Op. Temp/Rated Temp. = .5 (π_T = .5)
	RELAYS					
13.1	General Purpose		3	1	5	Max. Rated Temp. = 125°C , DPDT, MIL-SPEC, 10 Cycles/Hour, 4 Amp., General Purpose, Balanced Armature, Resistive Load, s = .5
13.1	Contactor, High Current		3	1	5	Max. Rated Temp. = 125°C, DPDT, MIL-SPEC, 10 Cycles/Hour, 600 Amp., Solenoid, Inductive Load, s = .5
13.1	Latching		3	1	5	Max. Rated Temp. = 125°C, MIL-SPEC, 4 Amp., Mercury Wetted, 10 Cyles/Hour, DPDT, Resistive Load, s = .5
13.1	Reed		1	2	6	Max. Rated Temp. = 85°C, MIL-SPEC, Signal Current, Dry Reed, 20 Cycles/Hour, SPST, Resistive Load, s = .5
13.1	Thermal Bi-Metal		1	1	10	Max. Rated Temp. = 125°C, MIL-SPEC, Bi-Metal, 10 Cycles/Hour, SPST, Inductive Load, 5 Amp., s = .5
13.1	Meter Movement		1	1	100	Max. Rated Temp. = 125°C, MIL-SPEC, Polarized Meter Movement, 10 Cycles/Hour, SPST, Resistive Load, s = .5
13.2	Solid State	MIL-R-28750				No Defaults
13.2	Time Delay Hybrid and Solid State	MIL-R-83726				No Defaults

Default Parameters for Inductive and Electromechanical Parts

Section #	Part Type	MIL-SPEC	λ_b	π_U	π_C	π_{cyc}	π_L	π_p	Comments
	SWITCHES								
14.1	Toggle & Pushbutton		.00045		1.5	1.0	1.48		Snap-action, MIL-SPEC, ≤ 1 Cycle/Hour, Resistive Load, Current Stress = .5, DPST
14.2	Sensitive	MIL-S-8805	.10			1.0	1.48		Actuation Differential > .002 inches, 1 Active Contact, MIL-SPEC, ≤ 1 Cycle/Hour, Resistive Load, Current Stress = .5
14.3	Rotary Wafer	MIL-S-3786	.0074			30	1.48		MIL-SPEC, Resistive Load, Current Stress = .5, 30 Cycles/Hour, 24 Active Contact
14.4	Thumbwheel	MIL-S-22710	.38			1.0	1.48		MIL-SPEC, Resistive Load, .Current Stress = .5, ≤ 1 Cycle/Hour, 6 Active Contacts
14.5	Circuit Breaker, Thermal	MIL-C-83383	.038	1.0	3.0				3PST, Not Used as a Power On/Off Switch
14.5	Circuit Breaker, Magnetic	MIL-C-55629	.020	1.0	3.0				3PST, Not Used as a Power On/Off Switch
	CONNECTORS								
15.1	Circular/Rack/Panel							7.4	$T_o = T_A + 10°C$, Insert Material B, 3 Mating/Unmating Cycles per 1000 Hours, 40 Active Contacts, MIL-SPEC π_E
15.1	Coaxial							1.4	$T_o = T_A + 5°C$, Insert Material C, 3 Mating/Unmating Cycles per 1000 Hours, 2 Active Contacts, MIL-SPEC π_E
15.2	Printed Circuit Board							7.4	$T_o = T_A + 10°C$, 3 Mating/Unmating Cycles per 1000 Hours, 40 Active Pins, MIL-SPEC π_E
15.3	IC Sockets		.00042					4.6	24 Active Contacts
16.1	Interconnection Assemblies (PCBs)		.000041						Printed Wiring Assembly, 1000 Wave Soldered Functional PTHs, 3 Circuit Planes, No Hand Soldering, π_E

Default Parameters for Miscellaneous Parts

Section #	Part Type	MIL-SPEC	λ_b	π_U	π_A	Comments
17.1	Connections					No Defaults
18.1	Meters, Panel					No Defaults
19.1	Quartz Crystals	MIL-C-3098	.032			50 MHz
	LAMPS, INCANDESCENT					
20.1	AC Applications		5.4	.72	1	Rated Voltage 28 Volts, Utilization Rate .5, Alternating Current
20.1	DC Applications		5.4	.72	3.3	Rated Voltage 28 Volts, Utilization Rate .5, Direct Current
	ELECTRONIC FILTERS					
21.1	Ceramic-Ferrite	MIL-F-15733	.022			MIL-SPEC
21.1	Discrete LC Comp	MIL-F-15733	.12			MIL-SPEC
21.1	Discrete LC & Crystal Comp.	MIL-F-18327	.27			MIL-SPEC
22.1	FUSES		.010			

APPENDIX B: VHSIC/VHSIC-LIKE AND VLSI CMOS (DETAILED MODEL)

This appendix contains the detailed version of the VHSIC/VLSI CMOS model contained in Section 5.3. It is provided to allow more detailed device level design trade-offs to be accomplished for predominate failure modes and mechanisms exhibited in CMOS devices. Reference 30 should be consulted for a detailed derivation of this model.

VHSIC/VHSIC-LIKE FAILURE RATE MODEL

$$\lambda_P(t) = \lambda_{OX}(t) + \lambda_{MET}(t) + \lambda_{HC}(t) + \lambda_{CON}(t) + \lambda_{PAC} + \lambda_{ESD} + \lambda_{MIS}(t)$$

$\lambda_P(t)$ = Predicted Failure Rate as a Function of Time

$\lambda_{OX}(t)$ = Oxide Failure Rate

$\lambda_{MET}(t)$ = Metallization Failure Rate

$\lambda_{HC}(t)$ = Hot Carrier Failure Rate

$\lambda_{CON}(t)$ = Contamination Failure Rate

λ_{PAC} = Package Failure Rate

λ_{ESD} = EOS/ESD Failure Rate

$\lambda_{MIS}(t)$ = Miscellaneous Failure Rate

The equations for each of the above failure mechanism failure rates are as follows:

OXIDE FAILURE RATE EQUATION

$$\lambda_{OX}\ (\text{in } F/10^6) = \frac{A\,A_{TYPE_{OX}}}{A_R}\left(\frac{D_{0_{OX}}}{D_R}\right)\left[(.0788\, e^{-7.7\, t_0})\,(A_{T_{OX}})\,(e^{-7.7\, A_{T_{OX}} t}) + \frac{.399}{(t+t_0)\sigma_{OX}} \exp\left(\frac{-.5}{\sigma_{OX}^2}\left(\ln\,(t + t_0) - \ln t_{50_{OX}}\right)^2\right)\right]$$

A = Total Chip Area (in cm^2)

$A_{TYPE_{OX}}$ = .77 for Custom and Logic Devices, 1.23 for Memories and Gate Arrays

APPENDIX B: VHSIC-VHSIC-LIKE AND VLSI CMOS (DETAILED MODEL)

OXIDE FAILURE RATE EQUATION (CONTINUED)

A_R = .21 cm^2

$D_{0_{ox}}$ = Oxide Defect Density (If unknown, use $\left(\frac{X_0}{X_s}\right)^2$ where X_0 = 2 µm and X_s is the feature size of the device)

D_R = 1 Defect/cm^2

t_0 = Effective Screening Time

= (Actual Time of Test (in 10^6 hrs.)) * ($A_{T_{ox}}$ (at junction screening temp.) (in °K))*

$A_{T_{ox}}$ = Temperature Acceleration Factor, = $\exp\left[\frac{-.3}{8.617\times10^{-5}}\left(\frac{1}{T_J} - \frac{1}{298}\right)\right]$

(where $T_J = T_C + \theta_{JC}P$ (in °K))

$A_{V_{ox}}$ = $e^{-192\left(\frac{1}{E_{ox}} - \frac{1}{2.5}\right)}$

E_{ox} = Maximum Power Supply Voltage V_{DD}, divided by the gate oxide thickness (in MV/cm)

$t_{50_{ox}}$ = $\frac{1.3\times10^{22}\,(QML)}{A_{T_{ox}}\,A_{V_{ox}}}$ (in 10^6 hrs.)

(QML) = 2 if on QML, .5 if not.

σ_{ox} = Sigma obtained from test data of oxide failures from the same or similar process. If not available, use a σ_{ox} value of 1.

t = time (in 10^6 Hours)

APPENDIX B: VHSIC/VHSIC-LIKE AND VLSI CMOS (DETAILED MODEL)

METAL FAILURE RATE EQUATION

$$\lambda_{MET} = \left[\frac{A\,A_{TYPE_{MET}}}{A_R}\,\frac{D_{0MET}}{D_R}\,\left(.00102\,e^{-1.18\,t_0}\right)\left(A_{T_{MET}}\right)\left(e^{-1.18\,A_{T_{MET}}\,t}\right)\right]$$

$$+\left[\frac{.399}{(t+t_0)\sigma_{MET}}\exp\left(\frac{-.5}{\sigma_{MET}^2}\left(\ln(t+t_0) - \ln t_{50_{MET}}\right)^2\right)\right]$$

A = Total Chip Area (in cm^2)

$A_{TYPE_{MET}}$ = .88 for Custom and Logic Devices, 1.12 for Memory and Gate Arrays

A_R = .21 cm^2

D_{0MET} = Metal Defect Density (If unknown use $\left(\frac{X_0}{X_S}\right)^2$ where X_0 = 2 µm and X_S is the feature size of the device)

D_R = 1 Defect/cm^2

$A_{T_{MET}}$ = Temperature Acceleration Factor

$$= \exp\left[\frac{-.55}{8.617\times10^{-5}}\left(\frac{1}{T_J} - \frac{1}{298}\right)\right] \left(T_J = T_{CASE} + \theta_{JC}P \quad (\text{in } °K)\right)$$

t_0 = Effective Screening Time (in 10^6 hrs.)

= $A_{T_{MET}}$ (at Screening Temp. (in °K)) * (Actual Screening Time (in 10^6 hrs))

$t_{50_{MET}}$ = $(QML)\dfrac{.388 * (\text{Metal Type})}{J^2\,A_{T_{MET}}}$ (in 10^6 hrs.)

(QML) = 2 if on QML, .5 if not.

Metal Type = 1 for Al, 37.5 for Al-Cu or for Al-Si-Cu

J = The mean absolute value of Metal Current Density (in 10^6 Amps/cm^2)

σ_{MET} = sigma obtained from test data on electromigration failures from the same or a similar process. If this data is not available use σ_{MET} = 1.

t = time (in 10^6 hrs.)

APPENDIX B: VHSIC-VHSIC-LIKE AND VLSI CMOS (DETAILED MODEL)

HOT CARRIER FAILURE RATE EQUATION

$$\lambda_{HC} = \frac{.399}{(t+t_0)\sigma_{HC}} \exp\left[\frac{-.5}{\sigma_{HC}^2}\left(\ln(t+t_0) - \ln t_{50_{HC}}\right)^2\right]$$

$$t_{50_{HC}} = \frac{(QML)3.74\times10^{-5}}{A_{T_{HC}}\, I_d}\left(\frac{I_{sub}}{I_d}\right)^{-2.5}$$

(QML) = 2 if on QML, .5 if not

$$A_{T_{HC}} = \exp\left[\frac{.039}{8.617\times10^{-5}}\left(\frac{1}{T_J} - \frac{1}{298}\right)\right] \text{ (where } T_J = T_C + \theta_{JC}P \text{ (in °K))}$$

I_d = Drain Current at Operating Temperature. If unknown use $I_d = 3.5\, e^{-.00157\, T_J \text{ (in °K)}}$ (mA)

I_{sub} = Substrate Current at Operating Temperature. If unknown use $I_{sub} = .0058\, e^{-.00689\, T_J \text{ (in °K)}}$ (mA)

σ_{HC} = sigma derived from test data, if not available use 1.

t_0 = $A_{T_{HC}}$ (at Screening Temp.(in °K)) • (Test Duration in 10^6 hours)

t = time (in 10^6 hrs.)

CONTAMINATION FAILURE RATE EQUATION

$$\lambda_{CON} = .000022\, e^{-.0028\, t_0\, A_{T_{CON}}}\, e^{-.0028\, A_{T_{CON}}\, t}$$

$$A_{T_{CON}} = \exp\left[\frac{-1.0}{8.617\times10^{-5}}\left(\frac{1}{T_J} - \frac{1}{298}\right)\right] \text{ (where } T_J = T_C + \theta_{JC}P \text{ (in °K))}$$

t_0 = Effective Screening Time

= $A_{T_{con}}$ (at screening junction temperature (in °K)) • (actual screening time in 10^6 hrs.)

t = time (in 10^6 hrs.)

APPENDIX B: VHSIC/VHSIC-LIKE AND VLSI CMOS (DETAILED MODEL)

PACKAGE FAILURE RATE EQUATION

λ_{PAC} = $(.0024 + 1.85 \times 10^{-5}\ (\#Pins))\ \pi_E\ \pi_Q\ \pi_{PT} + \lambda_{PH}$

π_E = See Section 5.10

π_Q = See Section 5.10

Package Type Factor (Π_{PT})

Package Type	Π_{PT}
DIP	1.0
Pin Grid Array	2.2
Chip Carrier (Surface Mount Technology)	4.7

λ_{PH} = Package Hermeticity Factor

λ_{PH} = 0 for Hermetic Packages

$$\lambda_{PH} = \frac{.399}{t\sigma_{PH}} \exp\left[\frac{-.5}{\sigma_{PH}^2}\left(\ln(t) - \ln(t_{50PH})\right)^2\right] \text{ for plastic packages}$$

$$t_{50_{PH}} = 86 \times 10^{-6} \exp\left[\frac{.2}{8.617 \times 10^{-5}}\left(\frac{1}{T_A} - \frac{1}{298}\right)\right] \exp\left[\frac{2.96}{RH_{EFF}}\right]$$

T_A = Ambient Temp. (in °K)

$$RH_{eff} = (DC)(RH)\left[e^{5230\left(\frac{1}{T_J} - \frac{1}{T_A}\right)}\right] + (1\text{-}DC)(RH) \quad \text{where } T_J = T_C + \theta_{JC}P \text{ (in °K)}$$

(for example, for 50% Relative Humidity, use RH = .50)

σ_{PH} = .74

t = time (in 10^6 hrs.)

APPENDIX B: VHSIC-VHSIC-LIKE AND VLSI CMOS (DETAILED MODEL)

EOS/ESD FAILURE RATE EQUATION

$$\lambda_{EOS} = \frac{-\ln\left(1 - .00057\, e^{-.0002\, V_{TH}}\right)}{.00876}$$

V_{TH} = ESD Threshold of the device using a 100 pF, 1500 ohm discharge model

MISCELLANEOUS FAILURE RATE EQUATION

$$\lambda_{MIS} = \left(.01\, e^{-2.2\, t_o}\right)\left(A_{T_{MIS}}\right)\left(e^{-2.2\, A_{T_{MIS}}\, t}\right)$$

$A_{T_{MIS}}$ = Temperature Acceleration Factor

$$= \exp\left[\frac{-.423}{8.6317 \times 10^{-5}}\left(\frac{1}{T_J} - \frac{1}{298}\right)\right]$$

where $T_J = T_C + \theta_{JC} P$ (in °K)

t_o = Effective Screening Time

= $A_{T_{MIS}}$ (at Screening Temp. (in °K)) * Actual Screening Time (in 10^6 hours)

t = time (in 10^6 hrs.)

APPENDIX C: BIBLIOGRAPHY

Publications listed with "AD" numbers may be obtained from:

National Technical Information Service
5285 Port Royal Road
Springfield, VA 22151
(703) 487-4650

U.S. Defense Contractors may obtain copies from:

Defense Technical Information Center
Cameron Station - FDA, Bldg. 5
Alexandria, VA 22304-6145
(703) 274-7633

Documents with AD number prefix with the letter "B" or with the suffix "L": These documents are in a "Limited Distribution" category. Contact the Defense Technical Information Center for ordering procedures.

Copies of MIL-STDS's, MIL-HDBK's, and specifications are available from:

Standardization Document Order Desk
700 Robins Ave.
Building 4, Section D
Philadelphia, PA 19111-5094
(215) 697-2667

The year of publication of the Rome Laboratory (RL) (formerly Rome Air Development Center (RADC)) documents is part of the RADC (or RL) number, e.g., RADC-TR-88-97 was published in 1988.

1. "Laser Reliability Prediction," RADC-TR-75-210, AD A016437.

2. "Reliability Model for Miniature Blower Motors Per MIL-B-23071B," RADC-TR-75-178, AD A013735.

3. "High Power Microwave Tube Reliability Study," FAA-RD-76-172, AD A0033612.

4. "Electric Motor Reliability Model," RADC-TR-77-408, AD A050179.

5. "Development of Nonelectronic Part Cyclic Failure Rates," RADC-TR-77-417, AD A050678.

   This study developed new failure rate models for relays, switches, and connectors.

6. "Passive Device Failure Rate Models for MIL-HDBK-217B," RADC-TR-77-432, AD A050180.

   This study developed new failure rate models for resistors, capacitors and inductive devices.

7. "Quantification of Printed Circuit Board Connector Reliability," RADC-TR-77-433, AD A049980.

8. "Crimp Connection Reliability," RADC-TR-78-15, AD A050505.

9. "LSI/Microprocessor Reliability Prediction Model Development," RADC-TR-79-97, AD A068911.

10. "A Redundancy Notebook," RADC-TR-77-287, AD A050837.

11. "Revision of Environmental Factors for MIL-HDBK-217B," RADC-TR-80-299, AD A091837.

12. "Traveling Wave Tube Failure Rates," RADC-TR-80-288, AD A096055.

13. "Reliability Prediction Modeling of New Devices," RADC-TR-80-237, AD A090029.

This study developed failure rate models for magnetic bubble memories and charge-coupled memories.

14. "Failure Rates for Fiber Optic Assemblies," RADC-TR-80-322, AD A092315.

15. "Printed Wiring Assembly and Interconnection Reliability," RADC-TR-81-318, AD A111214.

This study developed failure rate models for printed wiring assemblies, solderless wrap assemblies, wrapped and soldered assemblies and discrete wiring assemblies with electroless deposited plated through holes.

16. "Avionic Environmental Factors for MIL-HDBK-217," RADC-TR-81-374, AD B064430L.

17. "RADC Thermal Guide for Reliability Engineers," RADC-TR-82-172, AD A118839.

18. "Reliability Modeling of Critical Electronic Devices," RADC-TR-83-108, AD A135705.

This report developed failure rate prediction procedures for magnetrons, vidicions, cathode ray tubes, semiconductor lasers, helium-cadmium lasers, helium-neon lasers, Nd: YAG lasers, electronic filters, solid state relays, time delay relays (electronic hybrid), circuit breakers, I.C. Sockets, thumbwheel switches, electromagnetic meters, fuses, crystals, incandescent lamps, neon glow lamps and surface acoustic wave devices.

19. "Impact of Nonoperating Periods on Equipment Reliability," RADC-TR-85-91, AD A158843.

This study developed failure rate models for nonoperating periods.

20. "RADC Nonelectronic Reliability Notebook," RADC-TR-85-194, AD A163900.

This report contains failure rate data on mechanical and electromechanical parts.

21. "Reliability Prediction for Spacecraft," RADC-TR-85-229, AD A149551.

This study investigated the reliability performance histories of 300 Satellite vehicles and is the basis for the halving of all model π_E factors for MIL-HDBK-217E to MIL-HDKB-217E, Notice 1.

22. "Surface Mount Technology: A Reliability Review," 1986, Available from Reliability Analysis Center, PO Box 4700, Rome, NY 13440-8200, 800-526-4802.

23. "Thermal Resistances of Joint Army Navy (JAN) Certified Microcircuit Packages," RADC-TR-86-97, AD B108417.

24. "Large Scale Memory Error Detection and Correction," RADC-TR-87-92, AD B117765L.

This study developed models to calculate memory system reliability for memories incorporating error detecting and correcting codes. For a summary of the study see 1989 IEEE Reliability and Maintainability Symposium Proceedings, page 197, "Accounting for Soft Errors in Memory Reliability Prediction."

25. "Reliability Analysis of a Surface Mounted Package Using Finite Element Simulation," RADC-TR-87-177, AD A189488.

26. "VHSIC Impact on System Reliability," RADC-TR-88-13, AD B122629.

27. "Reliability Assessment of Surface Mount Technology," RADC-TR-88-72, AD A193759.

28. "Reliability Prediction Models for Discrete Semiconductor Devices," RADC-TR-88-97, AD A200529.

This study developed new failure rate prediction models for GaAs Power FETS, Transient Suppressor Diodes, Infrared LEDs, Diode Array Displays and Current Regulator Diodes.

29. "Impact of Fiber Optics on System Reliability and Maintainability," RADC-TR-88-124, AD A201946.

30. "VHSIC/VHSIC Like Reliability Prediction Modeling," RADC-TR-89-171, AD A214601.

This study provides the basis for the VHSIC model appearing in MIL-HDBK-217F, Section 5.

31. "Reliability Assessment Using Finite Element Techniques," RADC-TR-89-281, AD A216907.

This study addresses surface mounted solder interconnections and microwire board's plated-thru-hole (PTH) connections. The report gives a detailed account of the factors to be considered when performing an FEA and the procedure used to transfer the results to a reliability figure-of-merit.

32. "Reliability Analysis/Assessment of Advanced Technologies," RADC-TR-90-72, ADA 223647.

This study provides the basis for the revised microcircuit models (except VHSIC and Bubble Memories) appearing in MIL-HDBK-217F, Section 5.

33. "Improved Reliability Prediction Model for Field-Access Magnetic Bubble Devices," AFWAL-TR-81-1052.

34. "Reliability/Design Thermal Applications," MIL-HDBK-251.

35. "NASA Parts Application Handbook," MIL-HDBK-978-B (NASA).
This handbook is a five volume series which discusses a full range of electrical, electronic and electromechanical component parts. It provides extensive detailed technical information for each component part such as: definitions, construction details, operating characteristics, derating, failure mechanisms, screening techniques, standard parts, environmental considerations, and circuit application.

36. "Nonelectronic Parts Reliability Data 1991," NPRD-91.
This report contains field failure rate data on a variety of electrical, mechanical, electromechanical and microwave parts and assemblies (1400 different part types). It is available from the Reliability Analysis Center, PO Box 4700, Rome, NY 13440-8200, Phone: (315) 337-0900.

Custodians:
Army - CR
Navy - EC
Air Force - 17

Preparing Activity:
Air Force - 17

Project No. RELI-0064

APPENDIX C: BIBLIOGRAPHY

Review Activities:
Army - MI, AV, ER
Navy - SH, AS, OS
Air Force - 11, 13, 14, 15, 18, 19, 99

User Activities:
Army - AT, ME, GL
Navy - CG, MC, YD, TD
Air Force - 85

INSTRUCTIONS: In a continuing effort to make our standardization documents better, the DoD provides this form for use in submitting comments and suggestions for improvements. All users of military standardization documents are invited to provide suggestions. This form may be detached, folded along the lines indicated, taped along the loose edge *(DO NOT STAPLE)*, and mailed. In block 5, be as specific as possible about particular problem areas such as wording which required interpretation, was too rigid, restrictive, loose, ambiguous, or was incompatible, and give proposed wording changes which would alleviate the problems. Enter in block 6 any remarks not related to a specific paragraph of the document. If block 7 is filled out, an acknowledgement will be mailed to you within 30 days to let you know that your comments were received and are being considered.

NOTE: This form may not be used to request copies of documents, nor to request waivers, deviations, or clarification of specification requirements on current contracts. Comments submitted on this form do not constitute or imply authorization to waive any portion of the referenced document*(s)* or to amend contractual requirements.

(Fold along this line)

(Fold along this line)

DEPARTMENT OF THE AIR FORCE
RL/ERSS
Griffiss AFB, NY 13441-5700

OFFICIAL BUSINESS
PENALTY FOR PRIVATE USE $300

NO POSTAGE NECESSARY IF MAILED IN THE UNITED STATES

BUSINESS REPLY MAIL
FIRST CLASS PERMIT NO. 73236 WASHINGTON D.C.
POSTAGE WILL BE PAID BY THE DEPARTMENT OF THE AIR FORCE

Rome Laboratory
ATTN: RL/ERSS
Griffiss AFB, NY 13441-5700

STANDARDIZATION DOCUMENT IMPROVEMENT PROPOSAL

(See Instruction - Reverse Side)

1. DOCUMENT NUMBER MIL-HDBK-217F	2. DOCUMENT TITLE Reliability Prediction of Electronic Equipment
3a. NAME OF SUBMITTING ORGANIZATION	4. TYPE OF ORGANIZATION *(Mark one)* ☐ VENDOR ☐ USER ☐ MANUFACTURER ☐ OTHER *(Specify)*: _____
b. ADDRESS *(Street, City, State, ZIP Code)*	

5. PROBLEM AREAS

a. Paragraph Number and Wording:

b. Recommended Wording:

c. Reason/Rationale for Recommendation:

6. REMARKS

7a. NAME OF SUBMITTER *(Last, First, MI)* - Optional	b. WORK TELEPHONE NUMBER *(Include Area Code)* - Optional
c. MAILING ADDRESS *(Street, City, State, ZIP Code)* - Optional	8. DATE OF SUBMISSION (YY/MM/DD)

DD FORM 82 MAR **1426**

PREVIOUS EDITION IS OBSOLETE